TOSHIBA

FILE NO. 140-200507
(MFR'S VERSION A)

SERVICE MANUAL

COLOR TELEVISION/ DVD VIDEO PLAYER

MD24F51

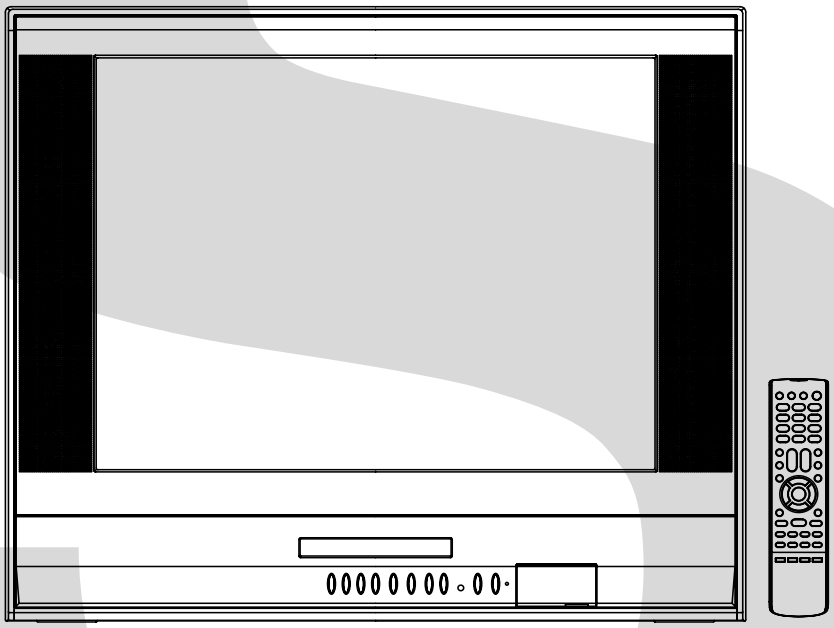

DOCUMENT CREATED IN JAPAN, March, 2005

CAUTION

THIS DIGITAL VIDEO PLAYER EMPLOYS A LASER SYSTEM.

TO ENSURE PROPER USE OF THIS PRODUCT, PLEASE READ THIS SERVICE MANUAL CAREFULLY AND RETAIN FOR FUTURE REFERENCE. SHOULD THE UNIT REQUIRE MAINTENANCE, CONTACT AN AUTHORIZED SERVICE LOCATION-SEE SERVICE PROCEDURE.

USE OF CONTROLS, ADJUSTMENTS OR THE PERFORMANCE OF PROCEDURES OTHER THAN THOSE SPECIFIED HEREIN MAY RESULT IN HAZARDOUS RADIATION EXPOSURE.

TO PREVENT DIRECT EXPOSURE TO LASER BEAM, DO NOT TRY TO OPEN THE ENCLOSURE. VISIBLE LASER RADIATION MAY BE PRESENT WHEN THE ENCLOSURE IS OPENED. DO NOT STARE INTO BEAM.

Location of the required Marking
The rating sheet and the safety caution are on the rear of the unit.

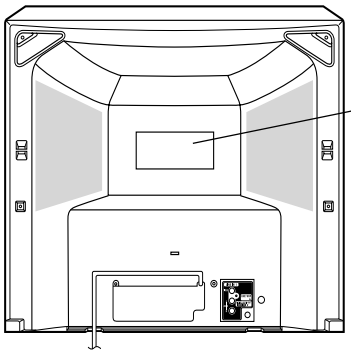

CERTIFICATION: COMPLIES WITH FDA RADIATION PERFORMANCE STANDARDS, 21 CFR SUBCHAPTER J.

PREPARATION OF SERVICING

The laser diode used for a pickup head may be destroyed with external static electricity.
Moreover, even if it is operating normally after repair, when static electricity discharge is received at the time of repair, the life of the product may be shortened.
Please perform the following measure against static electricity, be careful of destruction of a laser diode at the time of repair.

- Place the unit on a workstation equipped to protect, against static electricity, such as conductive mat.
- Soldering iron with ground wire or ceramic type is used.
- A worker needs to use a ground conductive wrist strap for body.

SERVICING NOTICES ON CHECKING

1. KEEP THE NOTICES

As for the places which need special attentions, they are indicated with the labels or seals on the cabinet, chassis and parts. Make sure to keep the indications and notices in the operation manual.

2. AVOID AN ELECTRIC SHOCK

There is a high voltage part inside. Avoid an electric shock while the electric current is flowing.

3. USE THE DESIGNATED PARTS

The parts in this equipment have the specific characters of incombustibility and withstand voltage for safety. Therefore, the part which is replaced should be used the part which has the same character.
Especially as to the important parts for safety which is indicated in the circuit diagram or the table of parts as a ⚠ mark, the designated parts must be used.

4. PUT PARTS AND WIRES IN THE ORIGINAL POSITION AFTER ASSEMBLING OR WIRING

There are parts which use the insulation material such as a tube or tape for safety, or which are assembled in the condition that these do not contact with the printed board. The inside wiring is designed not to get closer to the pyrogenic parts and high voltage parts. Therefore, put these parts in the original positions.

5. TAKE CARE TO DEAL WITH THE CATHODE-RAY TUBE

In the condition that an explosion-proof cathode-ray tube is set in this equipment, safety is secured against implosion. However, when removing it or serving from backward, it is dangerous to give a shock. Take enough care to deal with it.

6. AVOID AN X-RAY

Safety is secured against an X-ray by considering about the cathode-ray tube and the high voltage peripheral circuit, etc.
Therefore, when repairing the high voltage peripheral circuit, use the designated parts and make sure not modify the circuit.
Repairing except indicates causes rising of high voltage, and it emits an X-ray from the cathode-ray tube.

7. PERFORM A SAFETY CHECK AFTER SERVICING

Confirm that the screws, parts and wiring which were removed in order to service are put in the original positions, or whether there are the portions which are deteriorated around the serviced places serviced or not. Check the insulation between the antenna terminal or external metal and the AC cord plug blades. And be sure the safety of that.

(INSULATION CHECK PROCEDURE)

1. Unplug the plug from the AC outlet.
2. Remove the antenna terminal on TV and turn on the TV.
3. Insulation resistance between the cord plug terminals and the eternal exposure metal **[Note 2]** should be more than 1M ohm by using the 500V insulation resistance meter **[Note 1]**.
4. If the insulation resistance is less than 1M ohm, the inspection repair should be required.

[Note 1]

If you have not the 500V insulation resistance meter, use a Tester.

[Note 2]

External exposure metal: Antenna terminal

HOW TO ORDER PARTS

Please include the following informations when you order parts. (Particularly the VERSION LETTER.)

1. MODEL NUMBER and VERSION LETTER
   The MODEL NUMBER can be found on the back of each product and the VERSION LETTER can be found at the end of the SERIAL NUMBER.
2. PART NO. and DESCRIPTION
   You can find it in your SERVICE MANUAL.

IMPORTANT SAFEGUARDS

1. **READ INSTRUCTIONS**
   All the safety and operating instructions should be read before the unit is operated.
2. **RETAIN INSTRUCTIONS**
   The safety and operating instructions should be retained for future reference.
3. **HEED WARNINGS**
   All warnings on the unit and in the operating instructions should be adhered to.
4. **FOLLOW INSTRUCTIONS**
   All operating and use instructions should be followed.
5. **CLEANING**
   Unplug this unit from the wall outlet before cleaning. Do not use liquid cleaners or aerosol cleaners. Use a damp cloth for cleaning.
6. **ATTACHMENTS**
   Do not use attachments not recommended by the unit's manufacturer as they may cause hazards.
7. **WATER AND MOISTURE**
   Do not use this unit near water. For example, near a bathtub, washbowl, kitchen sink, or laundry tub, in a wet basement, or near a swimming pool.
8. **ACCESSORIES**
   Do not place this unit on an unstable cart, stand, tripod, bracket, or table. The unit may fall, causing serious injury, and serious damage to the unit. Use only with a cart, stand, tripod, bracket, or table recommended by the manufacturer.

PORTABLE CART WARNING
(symbol provided by RETAC)

S3126A

8A. An appliance and cart combination should be moved with care. Quick stops, excessive force, and uneven surfaces may cause the appliance and cart combination to overturn.

9. **VENTILATION**
   Slots and openings in the cabinet and in the back or bottom are provided for ventilation, to ensure reliable operation of the unit, and to protect it from overheating. These openings must not be blocked or covered. The openings should never be blocked by placing the unit on a bed, sofa, rug, or other similar surface. This unit should never be placed near or over a radiator or heat source. This unit should not be placed in a built-in installation such as a bookcase or rack unless proper ventilation is provided or the manufacturer's instructions have been adhered to.
10. **POWER SOURCES**
    This unit should be operated only from the type of power source indicated on the rating plate. If you are not sure of the type of power supply to your home, consult your appliance dealer or local power company. For units intended to operate from battery power, or other sources, refer to the operating instructions.
11. **GROUNDING OR POLARIZATION**
    This unit is equipped with a polarized alternating-current line plug (a plug having one blade wider than the other). This plug will fit into the power outlet only one way. This is a safety feature. If you are unable to insert the plug fully into the outlet, try reversing the plug. If the plug should still fail to fit, contact your electrician to replace your obsolete outlet. Do not defeat the safety purpose of the polarized plug. If your unit is equipped with a 3-wire grounding-type plug, a plug having a third (grounding) pin, this plug will only fit into a grounding-type power outlet. This too, is a safety feature. If you are unable to insert the plug into the outlet, contact your electrician to replace your obsolete outlet. Do not defeat the safety purpose of the grounding-type plug.
12. **POWER-CORD PROTECTION**
    Power-supply cords should be routed so that they are not likely to be walked on or pinched by items placed upon or against them, paying particular attention to cords at plugs, convenience receptacles, and the point where they exit from the appliance.
13. **LIGHTNING**
    To protect your unit from a lightning storm, or when it is left unattended and unused for long periods of time, unplug it from the wall outlet and disconnect the antenna or cable system. This will prevent damage to the unit due to lightning and power line surges.
14. **POWER LINES**
    An outside antenna system should not be located in the vicinity of overhead power lines or other electric light or power circuits, or where it can fall into such power lines or circuits. When installing an outside antenna system, extreme care should be taken to keep from touching such power lines or circuits, as contact with them might be fatal.
15. **OVERLOADING**
    Do not overload wall outlets and extension cords, as this can result in a risk of fire or electric shock.
16. **OBJECT AND LIQUID ENTRY**
    Do not push objects through any openings in this unit, as they may touch dangerous voltage points or short out parts that could result in fire or electric shock. Never spill or spray any type of liquid into the unit.

IMPORTANT SAFEGUARDS (CONTINUED)

17. OUTDOOR ANTENNA GROUNDING

If an outside antenna or cable system is connected to the unit, be sure the antenna or cable system is grounded so as to provide some protection against voltage surges and built-up static charges. Section 810 of the National Electrical Code, ANSI/NFPA 70, provides information with respect to proper grounding of the mast and supporting structure, grounding of the lead-in wire to an antenna discharge unit, size of grounding conductors, location of antenna discharge unit, connection to grounding electrodes, and requirements for the grounding electrode.

18. SERVICING

Do not attempt to service this unit yourself as opening or removing covers may expose you to dangerous voltage or other hazards. Refer all servicing to qualified service personnel.

19. DAMAGE REQUIRING SERVICE

Unplug this unit from the wall outlet and refer servicing to qualified service personnel under the following conditions:

a. When the power-supply cord or plug is damaged.
b. If liquid has been spilled, or objects have fallen into the unit.
c. If the unit has been exposed to rain or water.
d. If the unit does not operate normally by following the operating instructions. Adjust only those controls that are covered by the operating instructions, as an improper adjustment of other controls may result in damage and will often require extensive work by a qualified technician to restore the unit to its normal operation.
e. If the unit has been dropped or the cabinet has been damaged.
f. When the unit exhibits a distinct change in performance, this indicates a need for service.

20. REPLACEMENT PARTS

When replacement parts are required, be sure the service technician uses replacement parts specified by the manufacturer or those that have the same characteristics as the original parts.
Unauthorized substitutions may result in fire, electric shock or other hazards.

21. SAFETY CHECK

Upon completion of any service or repairs to this unit, ask the service technician to perform safety checks to determine that the unit is in proper operating condition.

22. WALL OR CEILING MOUNTING

The product should be mounted to a wall or ceiling only as recommended by the manufacturer.

23. HEAT

The product should be situated away from heat sources such as radiators, heat registers, stoves, or other products (including amplifiers) that produce heat.

24. DISC TRAY

Keep your fingers well clear of the disc tray as it is closing. It may cause serious personal injury.

25. CONNECTING

When you connect the product to other equipment, turn off the power and unplug all of the equipment from the wall outlet. Failure to do so may cause an electric shock and serious personal injury. Read the owner's manual of the other equipment carefully and follow the instructions when making any connections.

26. SOUND VOLUME

Reduce the volume to the minimum level before you turn on the product. Otherwise, sudden high volume sound may cause hearing or speaker damage.

27. SOUND DISTORTION

Do not allow the product output distorted sound for a longtime. It may cause speaker overheating and fire.

28. HEADPHONES

When you use the headphones, keep the volume at a moderate level. If you use the headphones continuously with high volume sound, it may cause hearing damage.

29. LASER BEAM

Do not look into the opening of the disc tray or ventilation opening of the product to see the source of the laser beam. It may cause sight damage.

30. DISC

Do not use a cracked, deformed, or repaired disc. These discs are easily broken and may cause serious personal injury and product malfunction.

31. NOTE TO CATV SYSTEM INSTALLER

This reminder is provided to call the CATV system installer’s attention to Article 820-40 of the NEC that provides guidelines for proper grounding and, in particular, specifies that the cable ground shall be connected to the grounding system of the building, as close to the point of cable entry as practical.

EXAMPLE OF ANTENNA GROUNDING AS PER THE NATIONAL ELECTRICAL CODE

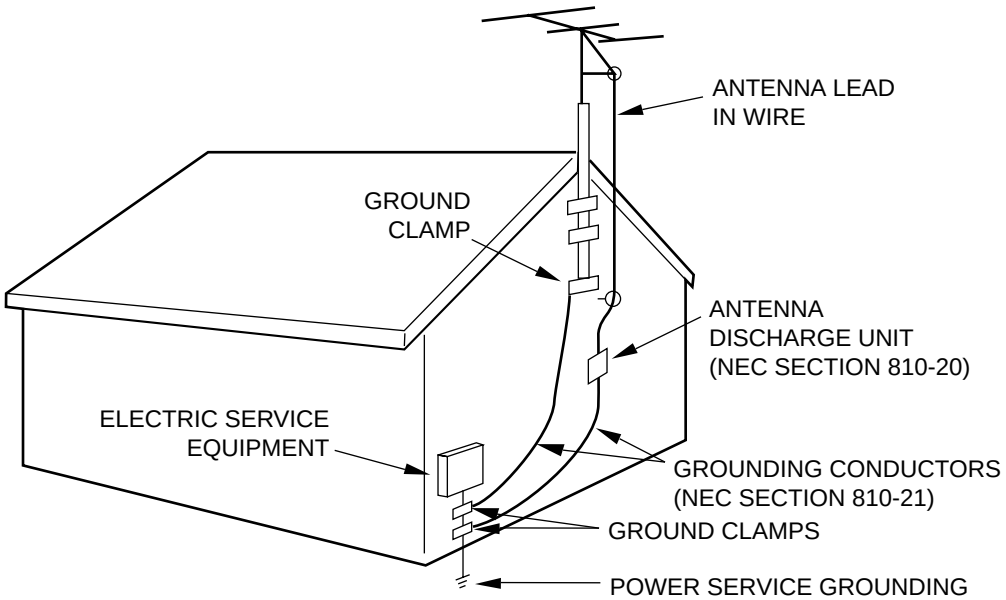

WHEN REPLACING DVD DECK

[When removing the DVD Deck]

Before removing Pick Up PCB and DVD PCB connector, the short circuit the position shown in **Fig. 1** using a soldering iron. If you remove the DVD Deck with no soldering, the Laser may be damaged.

[When installing the DVD Deck]

Remove all the soldering on the short circuit position after the connection of Pick Up PCB and DVD PCB connector.

NOTE

- Before your operation, please read “PREPARATION OF SERVICING”.
- Use the Pb Free solder.
- Manual soldering conditions
  - Soldering temperature: 350 ± 5˚C
  - Soldering time: Within 2 seconds
  - Soldering combination: Sn-3.0Ag-0.5Cu
- When Soldering/Removing of solder, use the draw in equipment over the Pick Up Unit to prevent the Flux smoke from it.

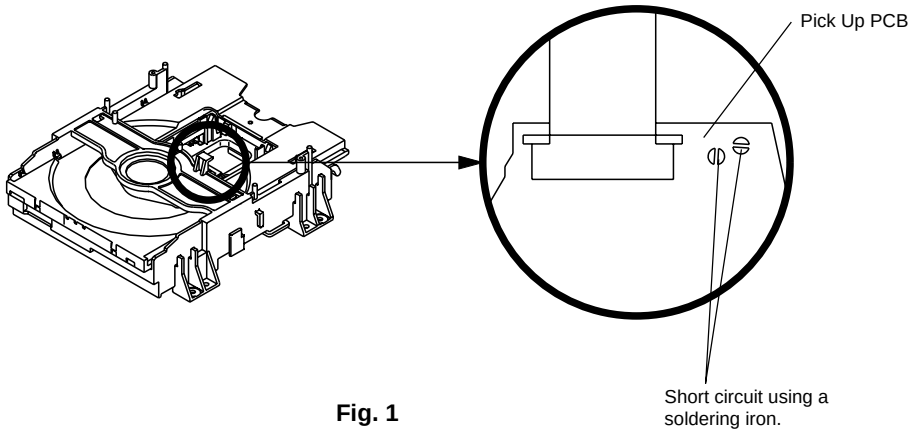

Fig. 1

DISC REMOVAL METHOD AT NO POWER SUPPLY

1. Remove the Back Cabinet and AV PCB/DVD Block. **(Refer to item 1 of the DISASSEMBLY INSTRUCTIONS.)**
2. Rotate the Main Gear in the direction of the arrow by hand. **(Refer to Fig. 1)**
3. Manually open the Tray.

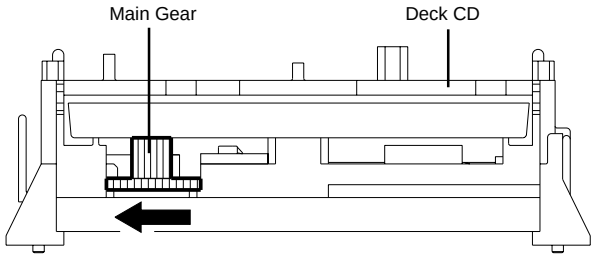

Fig. 1

PARENTAL CONTROL - RATING LEVEL

4 DIGIT PASSWORD CANCELLATION

If the stored 4 digit password in the Rating Level menu needs to be cancelled, please follow the steps below.

1. Turn Unit ON.
2. Set the DVD to the Stop Mode.
3. Check that 'No disc' is displayed on the screen.
4. Press and hold the 'STOP' button on the front panel.
5. Simultaneously press and hold the '7' key on the remote control unit.
6. Hold both keys for more than 3 seconds.
7. The On Screen Display message 'PASSWORD CLEAR' will appear.
8. The 4 digit password has now been cleared.

TRAY LOCK

Tray cannot be opened by setting the Tray Lock, please follow the steps below.

1. Turn Unit ON.
2. Set the DVD to the Stop Mode.
3. Press and hold the 'STOP(DVD)' key on the front panel.
4. Simultaneously press and hold the '9' key on the remote control unit.
5. Hold both keys for more than 3 seconds.
6. Press the OPEN/CLOSE key on the front panel to check the Tray Lock setting.

NOTE: No indications on the screen when the Tray Lock is setting.

To unlock the Tray Lock, please follow the steps below.

1. Turn Unit ON.
2. Set the DVD to the Stop Mode.
3. Press and hold the 'STOP(DVD)' key on the front panel.
4. Simultaneously press and hold the '9' key on the remote control unit.
5. Hold both keys for more than 3 seconds.
6. The Tray Lock has now been cleared.

NOTE: No indications on the screen when the Tray Lock is setting.

It is likely to be going to be changed to the following steps without a previous notice in the future.

If the above is not effective measures, please follow the steps below.

Tray cannot be opened by setting the Tray Lock, please follow the steps below.

1. Turn Unit ON.
2. Set the DVD to the Stop Mode.
3. Press it in order of 'SETUP', 'SUBTITLE', '3', 'AUDIO' and '0' key of a remote control unit.
4. The On Screen Display message ' ' will appear.
5. The Tray Lock has now been set up.

NOTE: No indications on the screen when the Tray Lock is setting.

To unlock the Tray Lock, please follow the steps below.

1. Turn Unit ON.
2. Set the DVD to the Stop Mode.
3. Press it in order of 'SETUP', 'SUBTITLE', '3', 'AUDIO' and '0' key of a remote control unit.
4. The On Screen Display message ' ' will appear.
5. The Tray Lock has now been cleared.

NOTE: No indications on the screen when the Tray Lock is setting.

ABOUT LEAD FREE SOLDER (PbF)

Distinction of PbF PCB:

PCBs (manufactured) using lead free solder will have a PbF printing on the PCB.
(Please refer to figures.)

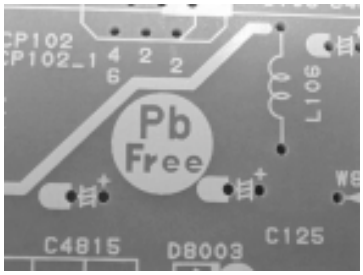

Caution:

- Pb free solder has a higher melting point than standard solder;
  Typically the melting point is 50°F~70°F(30°C~40°C) higher.
  Please use a soldering iron with temperature control and adjust it to 650°F ± 20°F (350°C ± 10°C).
  In case of using high temperature soldering iron, please be carefull not to heat too long.
- Pb free solder will tend to splash when heated too high (about 1100°F/ 600°C).
- All products with the printed circuit board with PbF printing must be serviced with lead free solder.
  When soldering or unsoldering, completely remove all of the solder from the pins or solder area,
  and be sure to heat the soldering points with the lead free solder until it melts sufficiently.

Recommendations

Recommended lead free solder composition is Sn-3.0Ag-0.5Cu.

TABLE OF CONTENTS

CAUTION A1-1
SERVICING NOTICES ON CHECKING A1-2
HOW TO ORDER PARTS A1-2
IMPORTANT SAFEGUARDS ..... A1-3~A1-5
WHEN REPLACING DVD DECK A1-6
DISC REMOVAL METHOD AT NO POWER SUPPLY A1-6
PARENTAL CONTROL-RATING LEVEL A1-7
TRAY LOCK A1-7
ABOUT LEAD FREE SOLDER (PbF) A1-8
TABLE OF CONTENTS A2-1
GENERAL SPECIFICATIONS ..... A3-1~A3-8
DISASSEMBLY INSTRUCTIONS
1. REMOVAL OF MECHANICAL PARTS AND P. C. BOARDS B1-1, B1-2
2. REMOVAL OF DVD DECK PARTS ..... B2-1~B2-4
3. REMOVAL OF ANODE CAP B3-1
4. REMOVAL AND INSTALLATION OF FLAT PACKAGE IC B4-1, B4-2

SERVICE MODE LIST C-1
CONFIRMATION OF HOURS USED C-1
WHEN REPLACING EEPROM (MEMORY) IC C-2
ELECTRICAL ADJUSTMENTS ..... D-1~D-7
BLOCK DIAGRAMS
DVD E-1, E-2
TV E-3, E-4
POWER E-5, E-6

PRINTED CIRCUIT BOARDS
DVD F-1, F-2
AV/CRT ..... F-3~F-6
LOADING MOTOR/SW F-7, F-8

SCHEMATIC DIAGRAMS
MPEG/MICON/DSP G-1, G-2
MEMORY G-3, G-4
MOTOR DRIVE G-5, G-6
AUDIO/VIDEO G-7, G-8
REGULATOR1 ..... G-9, G-10
MICON/TUNER G-11, G-12
CHROMA/IF G-13, G-14
DIGITAL COMB FILTER G-15, G-16
SOUND AMP G-17, G-18
IN/OUT G-19, G-20
STEREO G-21, G-22
DEFLECTION G-23, G-24
CRT G-25, G-26
POWER G-27, G-28
LOADING MOTOR/SW G-29, G-30

INTERCONNECTION DIAGRAM G-31, G-32
WAVEFORMS ..... H-1~H-3
MECHANICAL EXPLODED VIEWS ..... I1-1~I1-3
DVD DECK EXPLODED VIEW I2-1
MECHANICAL REPLACEMENT PARTS LIST J1-1
DVD DECK PLACEMENT PARTS LIST J2-1
ELECTRICAL REPLACEMENT PARTS LIST ..... J3-1~J3-6

GENERAL SPECIFICATIONS

G-1	**TV System**	CRT		CRT Size / Visual Size	21 inch / 508.0mmV
				CRT Type	Flat
				Magnetic Field BV/BH	+0.35G/0.30G
		Color System			NTSC
		Speaker			2 Speaker
				Position	Front
				Size	1.8 x 3.9 Inch
				Impedance	8 ohm
		Sound Output		MAX	2.5W + 2.5W
				10%(Typical)	—
G-2	**VCR System**	System			VHS Player / Recorder
		Video System			NTSC
		Hi-Fi STEREO			Yes
		NTSC PB			-
		Deck			OVD-7
		Heads	Video Head		4 Heads
			FM Audio Head		2 Heads
			Audio /Control		Mono /Yes
			Erase(Full Track Erase)		Yes
		Tape Speed	Rec	PAL	-
				NTSC	SP/SLP(EP)
			Play	PAL	-
				NTSC	SP/SLP(EP)
		Fast Forward / Rewind Time (Approx.) at 25oC			FF:1'48"/REW:1'48"
				with Cassette	T-120
		Forward/Reverse Picture Search		NTSC or PAL-M	SP/SLP(EP)=3x,5x / 9x,15x
		Frame Advance			Yes
		Slow Speed			1/10
G-3	**DVD System**	Color System			NTSC
		Disc			DVD, CD-DA, CD-R/RW DVD-R/RW (Video Format Only)
		Disc Diameter			120 mm , 80 mm
		Drive			DM3PA
		Search speed		Fwd	4 step
				Actual	2-120 times(DVD) 4-40 times (CD)
				Rev	4 step
				Actual	2-120 times(DVD) 4-40 times (CD)
		Slow speed		Fwd	Fwd 1/7 - 1/2 times
				Actual	--
				Rew	Rev --
				Actual	--
G-4	**Tuning System**	Broadcasting System			Japan System M
		Tuner and Receive CH		System	2Tuner
				Destination	Japan(w/CATV)
				CH Coverage	1~3, 4~12, 13~62, C13~C63
		Intermediate Frequency		Picture(FP)	58.75MHz
				Sound(FS)	54.25MHz
				FP-FS	4.50MHz
		Preset CH			12CH
		Stereo/Dual TV Sound			Japan-Stereo
		Tuner Sound Muting			Yes

GENERAL SPECIFICATIONS

G-5	**Signal**	Video Signal	Input Level		1 V p-p/75 ohm
			Output Level		-
			S/N Ratio (Weighted) at DVD Mode		65dB
			S/N Ratio (Weighted) at VCR Mode		50dB
			Horizontal Resolution at DVD Mode		400 Lines
			Horizontal Resolution at VCR(SP)Mode		220 Lines
		RGB Signal	Output Level		-
		Audio Signal	Input Level		-8dBm/50Kohm
		TV	Output Level (0dB=0.775Vrms)		-8dBm/1Kohm
		DVD	Output Level (-20dBFs 0dBFs=2.0Vrms)		-12.0dBm/1k ohm
			Digital Output Level		-
			S/N Ratio at DVD (Weighted)		90 dB
			Harmonic Distortion at DVD Mode		0.06% (1kHz)
			Frequency Response :		
			DVD Mode	at DVD	4Hz - 22kHz
				at VIDEO CD	-
				at SVCD	-
				at CD	4Hz - 20kHz
			VCR Mode	at SP	100Hz - 10kHz
				at LP	-
				at SLP	100Hz - 4kHz
		Hi-Fi Audio Signal	Dynamic Range : More than		90 dB
			Frequency Response :		20Hz - 20kHz
			Wow And Flutter : Less than		0.01 %Wrms
			Channel Separation : More than		60 dB
			Harmonic Distortion : Less than		1.0 %
G-6	**Power**	Power Source	AC		100V 50Hz/60Hz
			DC		-
		Power Consumption		at AC	120 W at 100 V 50/60 Hz
				at DC	-
			Stand by (at AC)		0.9 W at 100 V 50/60 Hz
			Per Year		125 kWh/Year
		Protector	Power Fuse		Yes
			Safety Circuit		Yes
			IC Protector(Micro Fuse)		No
			Dew Sensor		No
G-7	**Regulation**		Safety		DENAN
			Radiation		DENAN
			X-Radiation		DENAN
			Laser		DENAN
			Environment		Kaden Recycle , Shou(Saving) Energy
G-8	**Temperature**		Operation		+5oC ~ +40oC
			Storage		-20oC ~ +60oC
G-9	**Operating Humidity**				Less than 80% RH

GENERAL SPECIFICATIONS

G-10	**On Screen Display (TV/VCR)**	Menu			Yes	
			Menu	Type	Icon	
			Clock		Yes	
				Clock Set	Yes	
				On/Off Timer Set	Yes	
			TV Setup		Yes	
				V-Chip Set		No
				Picture	Yes	
				Audio	Yes	
			Channel Setup		Yes	
				TV/CATV		No
				Auto CH Memory		No
				Add/ Delete		No
				Area Code	Yes	
				CH Set	Yes	
				CATV	Yes	
			Tape		Yes	
				Timer Rec Set	Yes	
				Auto Repeat On/Off/On Memory	Yes	
				Rental On/Off	Yes	
			SHOUENE		Yes	
				Power Save Mode On/Off	Yes	
				No Signal Power Off On/Off	Yes	
				No Control Power Off On/Off	Yes	
			Picture	Contrast	Yes	
				Brightness	Yes	
				Color	Yes	
				Tint	Yes	
				Sharpness	Yes	
			Audio	Bass	Yes	
				Treble	Yes	
				Balance	Yes	
				Surround On/Off	Yes	
				Stable Sound(Night Sound) On/Off		No
				Sap On/Off		No
		G-CODE(or SHOWVIEW or PLUSCODE)No. Entry			Yes	
		Clock / Date			Yes	
		CH/AV			Yes	
		Tape Counter(Linear Counter)			Yes	
		Tape Speed			Yes	
		Sleep Time			Yes	
		Stereo/Audio Output			Yes	
				Bilingual	Yes	
				SAP		No
		Control Level	Volume		Yes	
			Bright / Contrast / Sharpness / Color		Yes	
			Tint		Yes	
			Bass/Treble/Balance		Yes	
			Manual Tracking			No
		Play/Stop/FF/ Rew/Rec/OTR			Yes	
		Auto Tracking/Manual Tracking			Yes	
		Caption / Text				No
		Index			Yes	
		Game			Yes	
		Mute			Yes	
		Hi-Fi			Yes	
		Repeat			Yes	
		Zero Return			Yes	
		DEW				No

GENERAL SPECIFICATIONS

G-11	**On Screen Display (DVD)**	Menu (DVD)			Yes	
			Menu Type		Icon	
			Language		Yes	
				Menu	Yes	
				Subtitle	Yes	
				Audio	Yes	
				OSD Language(Set up Language)		No
			Video		Yes	
				E.B.L. (Enhanced Black Level)		No
				TV Screen Size(4:3)	Yes	
				OSD Display On/Off	Yes	
				Picture Mode (Video/Film/Auto)	Yes	
				JPEG Interval		No
			Audio		Yes	
				DRC (Dynamic Range Control)	Yes	
				Dialogue (On DRC[TV] / Off DRC[Std])		No
				Surround		No
			System		Yes	
				Disc/Card Slot		No
				Password Lock/ Un Lock	Yes	
				Parental	Yes	
				Select Files		No
				HDMI (480p/1080i/720p)		No
				Output		No
			Open		Yes	
			Close		Yes	
			No Disc		Yes	
			Reading Disc		Yes	
			Play		Yes	
			Still/Pause		Yes	
			Stop		Yes	
			Prohibit Mark		Yes	
			PBC			No
			Step		Yes	
			Skip(>>|)		Yes	
			Skip(|<<)		Yes	
			Random		Yes (CD)	
			Repeat		Yes	
			Slow+		Yes	
			Slow-			No
			Search+		Yes	
			Search-		Yes	
			Jump		Yes	
			Resume		Yes	
			Title No.		Yes	
			Chapter No.		Yes	
			Track No.		Yes	
			Time		Yes	
			Sub Title No.		Yes	
			Angle No.		Yes	
			Audio No.		Yes	
			Audio Stereo L/R			No
			Zoom		Yes	
			Marker No.			No
			Program Play Back		Yes (CD)	
			Surround On/Off			No
			Screen Saver			No
			MP3	Folder Name		No
				File Name		No
				File No		No
				Time		No
				Track No		No
G-12	**OSD Language**		TV/VCR		Japanese	
			DVD		Japanese	

GENERAL SPECIFICATIONS

G-13	**Clock,Timer and Timer Back-up**	Calendar		1990/1/1 ~ 2081/12/31
		Timer Events		8 Program/ 1 Month
		One Touch Recording Max Time		6 Hours
		Sleep Timer	Max Time	120 Min
			Step	10 Min
		On/Off Timer	Program(On Timer / Off Timer)	1 Program
		Auto Shut Off	No Signal	15 Min
			No Operation	3 Hours
		Timer Back-up (at Power Off Mode)		30 Min.
G-14	**Remote Control Unit**	Unit(for TOSHIBA)		RC-JB
		Glow in Dark Remocon		Yes
		Remocon Format		TOSHIBA
		Format		TOSHIBA
		Custom Code		40-BFh,44-BBh,45-BAh
		Power Source	Voltage(D.C)	3V
			UM size x pcs	UM-4 x 2 pcs
		Total Keys		49 Key
		Keys	TV/VCR/DVD	Yes
			Input Select	Yes
			Power	Yes
			1	Yes
			2	Yes
			3	Yes
			4	Yes
			5	Yes
			6	Yes
			7	Yes
			8	Yes
			9	Yes
			10/0	Yes
			11/Extend	Yes
			12	Yes
			CATV	Yes
			Display(Call)	Yes
			Audio Select	Yes
			Sleep	Yes
			G-Code/Program	Yes
			SP/SLP	Yes
			Zero Return / Subtitle	Yes
			Cancel/Clear	Yes
			T-REC	Yes
			Rec(T-Rec/OTR)	Yes
			Rec/OTR	Yes
			Mute	Yes
			Menu /Set Up	Yes
			Channel Up	Yes
			Channel Down	Yes
			Volume Up	Yes
			Volume Down	Yes
			Enter	Yes
			Play	Yes
			Rew	Yes
			F. Fwd	Yes
			Pause / Still	Yes
			Skip+/Viss+	Yes
			Skip-/Viss-	Yes
			Stop	Yes
			Slow	Yes
			D.Tracking / Top Menu	Yes
			Tracking+ / DVD Menu	Yes
			Tracking- / Play Mode	Yes
			Counter Reset / Angle	Yes
			Game/Zoom	Yes
			Return	Yes
			Repeat A-B	Yes
			CM Skip / Jump	Yes
			Eject	No

GENERAL SPECIFICATIONS

G-15	**Features (TV/VCR)**	Auto Head Cleaning		Yes
		VIDEO PLUS+(SHOWVIEW,G-CODE)		Yes
		Auto Clock		No
		Just Clock Function		Yes
		Forward / Reverse Picture Search		Yes
		x2 Play Mode(Without Muting)		Yes
		Reverse Slow		No
		One Touch Playback		No
		Auto CH Memory		No
		Surround		Yes
		Stable Sound(Night Sound)		No
		Closed Caption		No
		TV Auto Shut off Function		Yes
		End Call		No
		Index Search		Yes
		SQPB		Yes
		CATV		Yes
		CM Skip(30sec x 6 Times)		Yes
		Comb Filter (2Lines)		Yes
		VM Circuit		Yes
		TV/Rec Monitor		No
		Program Extend		Yes
		Choke Coil		Yes
		Power Save Mode		Yes
		Energy Star		No
		Protect of FBT Leak Circuit		Yes
		Zero Return		Yes
		Power On Memory		Yes
		Area Code(150Area)		Yes
		V-chip USA V-chip		No
		CANADA V-chip		No
	Features (DVD)	Tray Lock		No
		Auto Stop	(Pause, and Resume Stop after 5min.)	Yes
		Copy (Disc to Tape)		Yes (by Conditioning)
		Video CD Playback		No
		SVCD Playback		No
		MP3 Playback		No
		WMA Playback		No
		JPEG Playback		No
		Digital Out	(Dolby Digital)	Yes
			(MPEG)	Yes
			(PCM)	Yes
			(DTS)	Yes
		Down Mix Out	(Dolby Digital)	Yes
			(DTS)	No
		3D Surround		No
		Screen Saver		No
		Audio DAC		192kHz / 24bit

GENERAL SPECIFICATIONS

G-16	**Accessories**	Owner's Manual		Language	Japanese
				w/Guarantee Card	No
		Remote Control Unit			Yes
		Battery			Yes
				UM size x pcs	UM-4 x 2 pcs
				OEM Brand	Yes (TOSHIBA)
		Rod Antenna			No
				Poles	-
				Terminal	-
		Loop Antenna			No
				Terminal	-
		U/V Mixer			No
		Antenna Change Plug			No
		DC Car Cord (Center+)			No
		AC Plug Adapter			No
		AC Cord			No
		AV Cord (2Pin-1Pin)			No
		Guarantee Card			Yes
		Registration Card (NDL Card)			No
		ESP Card			No
		Warning Sheet			No
		Dew/AHC Caution Sheet			No
		Quick Set-up Sheet			No
		Circuit Diagram			No
		Service Facility List			No
		Important Safeguard			No
		PTB Sheet			No
		300,75 ohm to 75 ohm Antenna Adapter			Yes
G-17	**Interface**	Switch	Front	Power (Tact)	Yes
				Channel Up	Yes
				Channel Down	Yes
				Volume Up	Yes
				Volume Down	Yes
				Play (VCR)	Yes
				Stop / Eject (VCR)	Yes
				F.FWD/Cue (VCR)	Yes
				Rew/Rev (VCR)	Yes
				REC/OTR (VCR)	Yes
				Play (DVD)	Yes
				Stop (DVD)	Yes
				Skip+ /Search+ (DVD)	Yes
				Skip- /Search- (DVD)	Yes
				Open/Close (DVD)	Yes
				Input Select	No
				Main Power SW	No
		Indicator		Power/Stand-by	Yes(Green / Red)
				T-REC/REC/OTR	Yes(Orange / Red)
				On Timer	Yes(Red)
				TV/VCR	No
				DVD	No
		Terminals	Front	Video Input	RCA x 1
				Audio Input	RCA x 2(Stereo)
				Other Terminal	HeadPhone (Stereo & Mono, 3.5mm)
			Rear	Video Input	RCA x 1
					S-Video x 1
				D-Terminal	D1 x1
				Audio Input	RCA x 2(Stereo)
				Video Output	No
				Audio Output	RCA x 2(Stereo)
				Digital Audio Output	Optical (DVD Only)
				VHF/UHF Antenna Input	F Type
				AC Inlet	No
G-18	**Set Size**			Approx. W x D x H (mm)	573 x 482 x 517
G-19	**Weight**			Net (Approx.)	27.0kg (59.5lbs)
				Gross (Approx.)	30.5kg (67.3lbs)

GENERAL SPECIFICATIONS

G-20	**Carton**	Master Carton		No
			Content	-
			Material	-
			Dimensions W x D x H(mm)	-
			Description of Origin	-
		Gift Box	Material	Double/Brown
			Dimensions W x D x H(mm)	658 x 575 x 625
			Description of Origin	Yes
		Drop Test	Natural Dropping At	1 Corner / 2 Edges / 4 Surfaces
			Height (cm)	60(ORION SPEC:31)
		Container Stuffing(40' container)		216 Sets
G-21	**Material**	Cabinet	Front	PS 94V0 Non-Decabrom
			Rear	PS 94V0 Non-Decabrom
		PCB	Non-Halogen	Yes(w/o MPEG PCB)
			Eyelet	Yes
G-22	**Environment**	Environmental standard requirement (by buyer)		Green procurement of TOSHIBA
			Pb-free	Phase3(Phase3A)

DISASSEMBLY INSTRUCTIONS

1. REMOVAL OF MECHANICAL PARTS AND P.C. BOARDS

1-1: BACK CABINET (Refer to Fig. 1-1)

1. Remove the 6 screws ①.
2. Remove the 2 screws ② which are used for holding the Back Cabinet.
3. Remove the Back Cabinet in the direction of arrow.

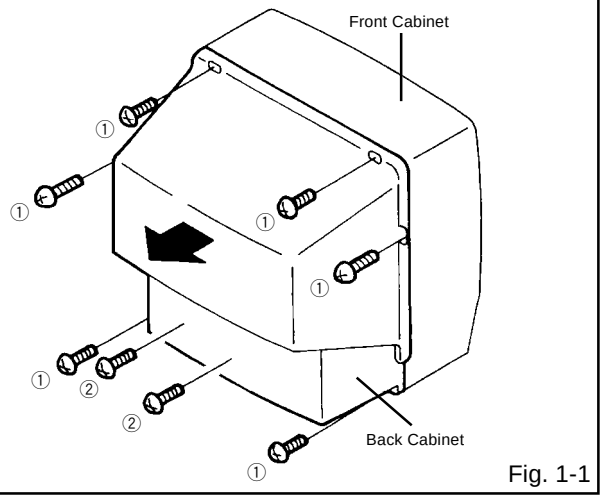

Fig. 1-1

1-2: CRT PCB (Refer to Fig. 1-2)

CAUTION: BEFORE REMOVING THE ANODE CAP, DISCHARGE ELECTRICITY BECAUSE IT CONTAINS HIGH VOLTAGE. BEFORE ATTEMPTING TO REMOVE OR REPAIR ANY PCB, UNPLUG THE POWER CORD FROM THE AC SOURCE.

1. Remove the Anode Cap. (Refer to REMOVAL OF ANODE CAP)
2. Disconnect the following connector: **(CP801)**.
3. Remove the CRT PCB in the direction of arrow.

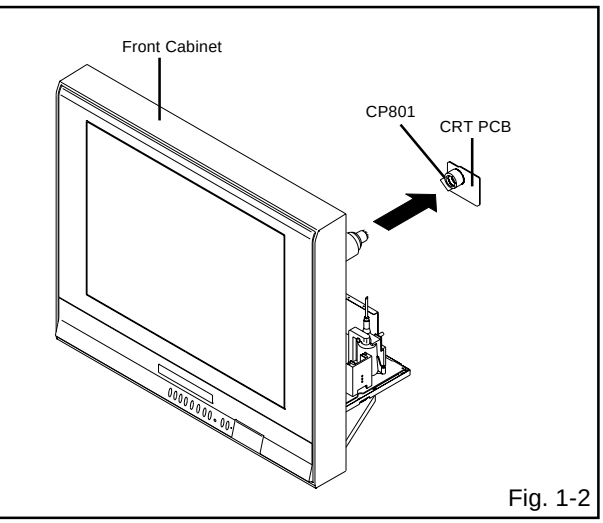

Fig. 1-2

1-3: AV PCB/DVD BLOCK (Refer to Fig. 1-3)

1. Unlock the support ①.
2. Remove the Plate Bottom Holder.
3. Remove the screw ②.
4. Disconnect the following connectors: **(CP303, CP404 and CP3800)**.
5. Remove the AV PCB/DVD Block in the direction of arrow.

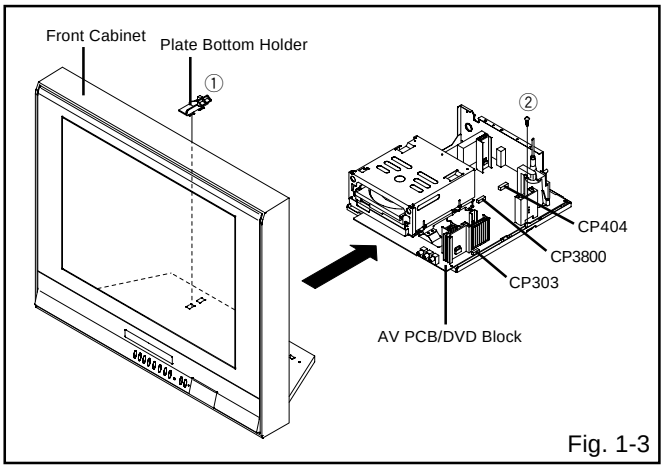

Fig. 1-3

1-4: DVD BLOCK (Refer to Fig. 1-4)

1. Disconnect the following connectors: **(CP8001 and CP8002)**.
2. Remove the 4 screws ①.
3. Remove the DVD Block in the direction of arrow.

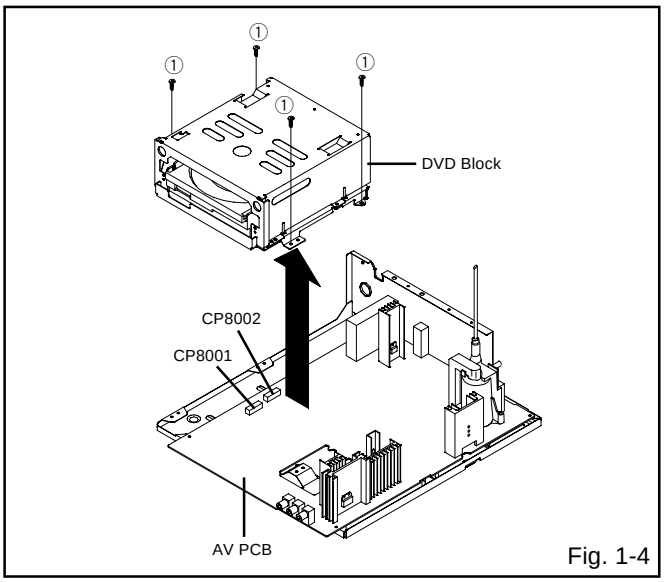

Fig. 1-4

DISASSEMBLY INSTRUCTIONS

1-5: DVD PCB/DVD DECK (Refer to Fig. 1-5)

1. Short circuit the position shown in **Fig. 1-5** using a soldering iron. If you remove the DVD Deck with no soldering, the Laser may be damaged.
2. Remove the 4 screws ①.
3. Remove the DVD Top in the direction of arrow (A).
4. Disconnect the following connectors: **(CP2301, CP2302 and CP2303)**.
5. Remove the 2 screws ②.
6. Remove the DVD PCB in the direction of arrow (B).
7. Remove the 4 screws ③.
8. Remove the DVD Deck in the direction of arrow (C).

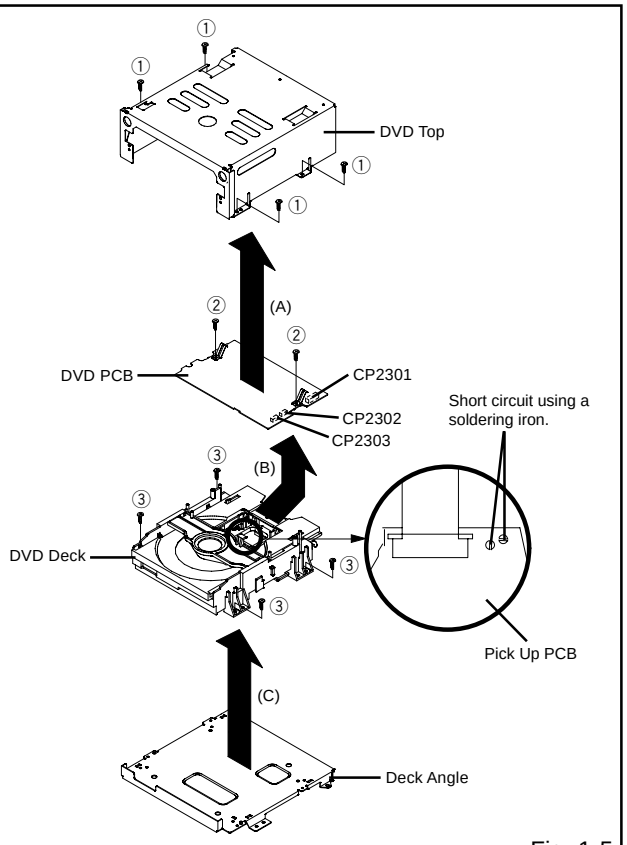

Fig. 1-5

NOTE

1. Before your operation, please read “PREPARATION OF SERVICING”.
2. Use the Lead Free solder.
3. Manual soldering conditions
   - Soldering temperature: 350 ± 5˚C
   - Soldering time: Within 2 seconds
   - Soldering combination: Sn-3.0Ag-0.5Cu
4. When Soldering/Removing of solder, use the drawing equipment over the Pick Up Unit to keep the Flux smoke away from it.
5. When installing the DVD Deck, remove all the soldering on the short circuit position after the connection of Pick Up PCB and DVD PCB connector.

1-6: AV PCB (Refer to Fig. 1-6)

1. Remove the screw ①.
2. Remove the 2 screws ②.
3. Remove the 4 screws ③.
4. Remove the Jack Shield.
5. Remove the AV PCB in the direction of arrow.

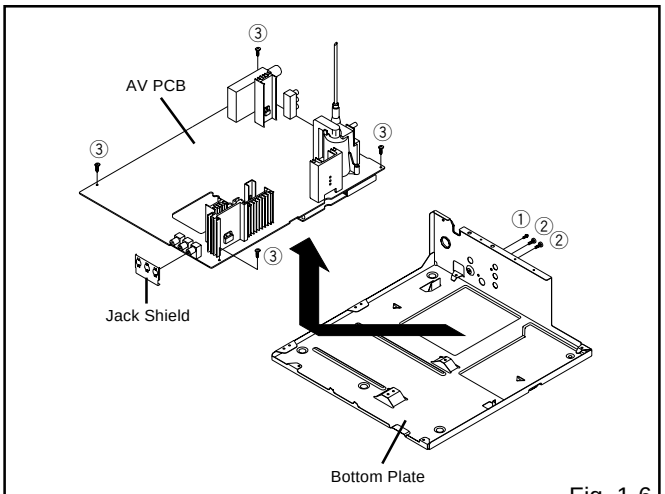

Fig. 1-6

DISASSEMBLY INSTRUCTIONS

2. REMOVAL OF DVD DECK PARTS

NOTE

1. Disassemble only the DVD DECK PARTS parts listed here. Minute adjustments are needed if the disassembly is done. If the repair is needed except listed parts, replace the DVD MECHA ASS'Y.

2-1: TRAY (Refer to Fig. 2-1-A)

1. Set the Tray opened. **(Refer to the DISC REMOVAL METHOD AT NO POWER SUPPLY)**
2. Unlock the 2 supports ① and remove the Tray.

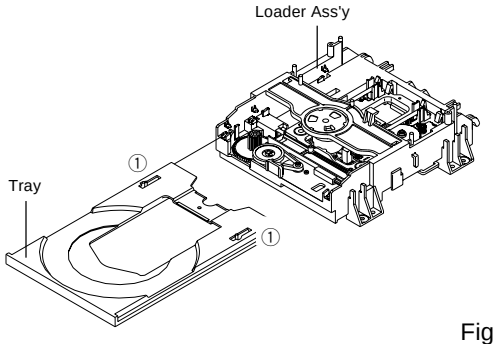

Fig. 2-1-A

NOTE

1. In case of the Tray installation, install them as the circled section of Fig. 2-1-B so that the each markers are met.

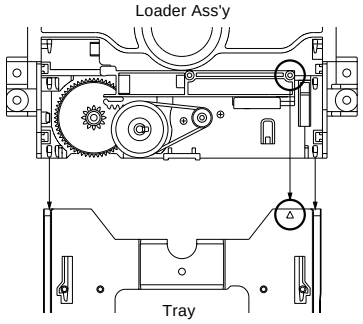

Fig. 2-1-B

2-2: TRAVERSE ASS'Y (Refer to Fig. 2-2-A)

1. Remove the screw ①.
2. Unlock the 2 supports ②.
3. Remove the Insulator (R) from the Loader Sub Ass'y.
4. Remove the Traverse Ass'y.

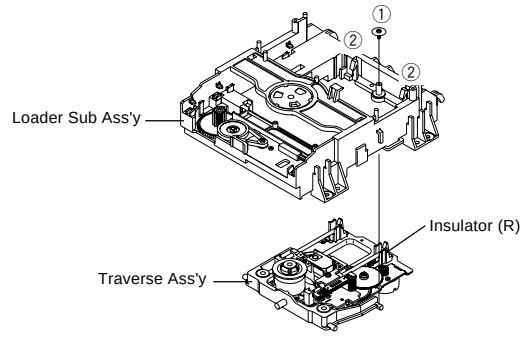

Fig. 2-2-A

NOTE

1. In case of the Traverse Ass'y, install it from (1) to (4) in order. **(Refer to Fig. 2-2-B)**
2. In case of the Traverse Ass'y installation, hook the wire on the Loader Ass'y as shown Fig. 2-2-C.

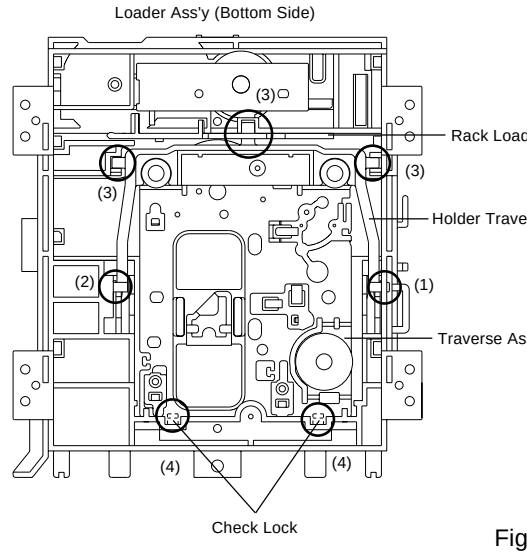

Fig. 2-2-B

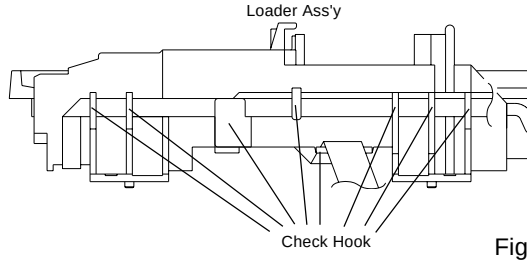

Fig. 2-2-C

DISASSEMBLY INSTRUCTIONS

2-3: LOADING MOTOR PCB ASS'Y/ LOADING BELT (Refer to Fig. 2-3-A)

1. Remove the Loading Belt.
2. Remove the screw ①.
3. Remove the 2 screws ②.
4. Remove the Loading Motor PCB Ass'y.
5. Remove the Pulley Motor.

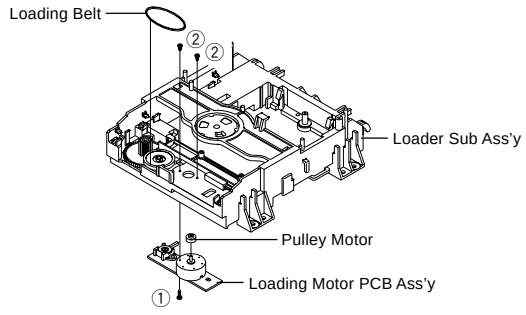

• Screw Torque: 2.5 ± 0.3kgf•cm (Screw ①)
• Screw Torque: 1.0 ± 0.3kgf•cm (Screw ②)

Fig. 2-3-A

NOTE

1. In case of the Pulley Motor installation, check if the value of the Fig. 2-3-B is correct.
2. When installing the Loading Motor, do it on the position of Fig. 2-3-C with the following soldering conditions.
   Manual soldering conditions
   • Soldering temperature: 350 ± 5˚C
   • Soldering time: Within 4 seconds
   • Soldering combination: Sn-3.0Ag-0.5Cu
3. When installing the Loading Motor PCB Ass'y, install it correctly as Fig. 2-3-C.
4. In case of the Loading Motor PCB Ass'y installation, hook the wire on the Traverse Ass'y as shown Fig. 2-3-C.

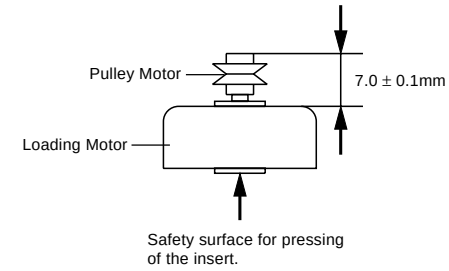

Fig. 2-3-B

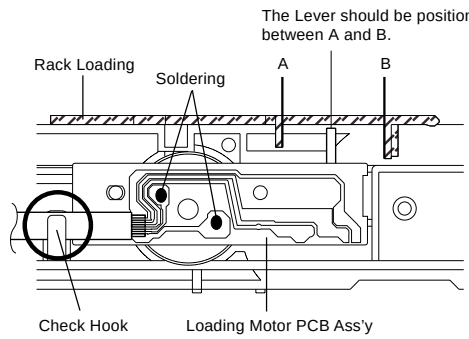

Fig. 2-3-C

2-4: RACK LOADING/GEAR MAIN/GEAR PULLEY (Refer to Fig. 2-4-A)

1. Press down the catcher ① and slide the Rack Loading.
2. Unlock the support ② and remove the Gear Pulley.
3. Remove the Gear Main.

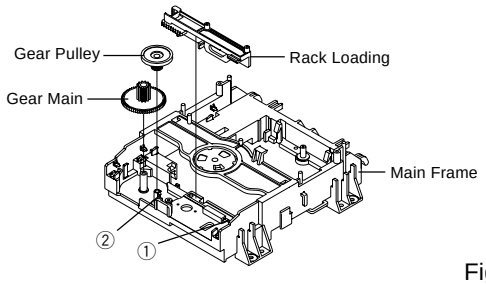

Fig. 2-4-A

NOTE

1. In case of the Rack Loading installation, do not mesh it to the Gear Main as shown the Fig. 2-4-B.

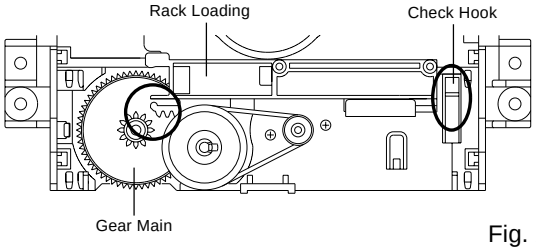

Fig. 2-4-B

2-5: CLAMPER ASS'Y (Refer to Fig. 2-5-A)

1. Press the Clamper and rotate the Plate Clamper clockwise, then unlock the 3 supports ①.
2. Remove the Clamper Plate, Magnet Clamper and Clamper.

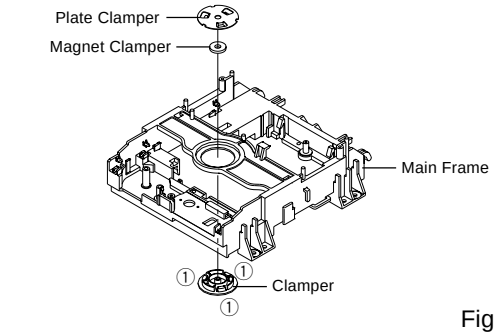

Fig. 2-5-A

NOTE

1. In case of the Clamper Ass'y installation, install correctly as Fig. 2-5-B.

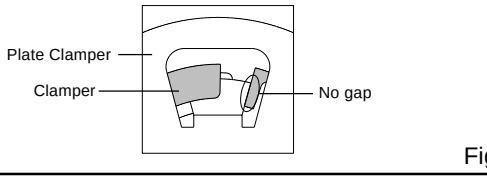

Fig. 2-5-B

DISASSEMBLY INSTRUCTIONS

2-6: HOLDER TRAVERSE/INSULATOR (F)/INSULATOR (R) (Refer to Fig. 2-6-A)

1. Remove the Holder Traverse.
2. Remove the 2 Insulator (F).
3. Remove the Insulator (R).

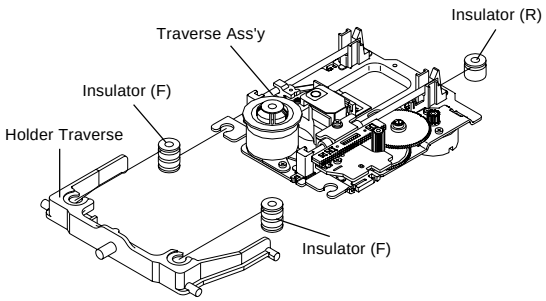

Fig. 2-6-A

NOTE

1. In case of the Insulator (F) installation, install correctly as Fig. 2-6-B.
2. In case of the Insulator (R) installation, install correctly as Fig. 2-6-C.

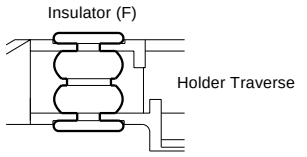

Fig. 2-6-B

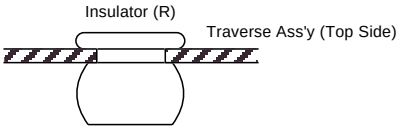

Fig. 2-6-C

2-7: RACK FEED ASS'Y/SWITCH PCB ASS'Y/FEED MOTOR (Refer to Fig. 2-7-A)

1. Remove the screw ①.
2. Remove the Rack Feed Ass'y.
3. Remove the screw ②.
4. Remove the Switch PCB Ass'y.
5. Remove the 2 screw ③.
6. Remove the Feed Motor.
7. Remove the Gear Motor.

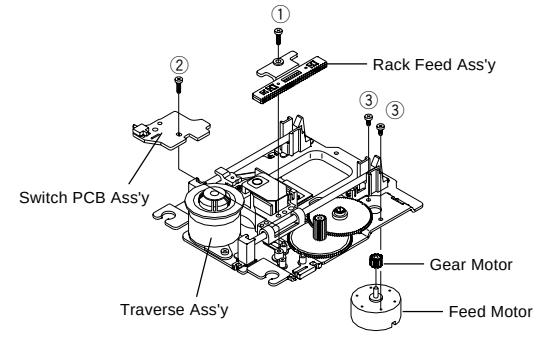

- Screw Torque: 5.0 ± 0.3kgf•cm (Screw ①)
- Screw Torque: 3.0 ± 0.3kgf•cm (Screw ②)
- Screw Torque: 1.0 ± 0.3kgf•cm (Screw ③)

Fig. 2-7-A

NOTE

1. When pushing the Rack Feed in the direction of the arrow, it should be restored to the original position by the spring force. **(Refer to Fig. 2-7-B)**
2. In case of the Gear Motor installation, check if the value of the Fig. 2-7-C is correct.
3. When installing the wire of the Switch PCB Ass'y, install it correctly as Fig. 2-7-D.
   Manual soldering conditions
   - Soldering temperature: 350 ± 5˚C
   - Soldering time: Within 4 seconds
   - Soldering combination: Sn-3.0Ag-0.5Cu
4. After the assembly of the Traverse Ass'y, hook the wire on the Traverse Ass'y as shown Fig. 2-7-E.

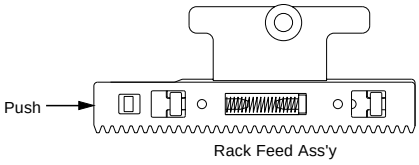

Fig. 2-7-B

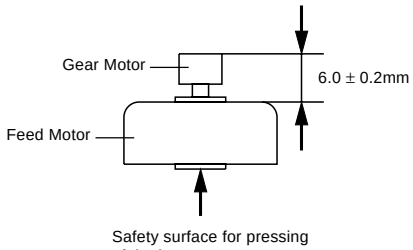

Fig. 2-7-C

DISASSEMBLY INSTRUCTIONS

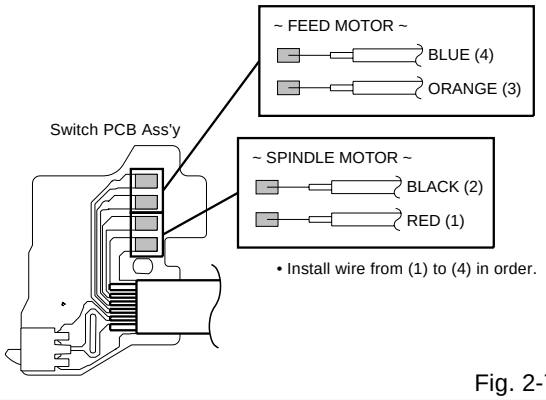

• Install wire from (1) to (4) in order.

Fig. 2-7-D

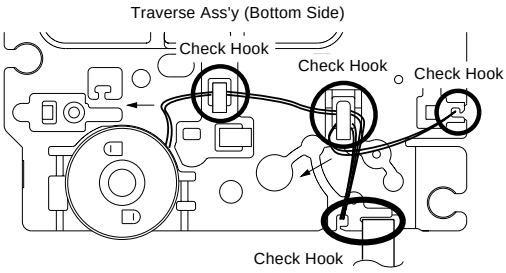

• Loosen the wire in the direction of the arrow.

Fig. 2-7-E

2-8: FFC WIRE HANDLING

1. When installing the FFC, fold it correctly and install it as shown from Fig. 2-8-A to Fig. 2-8-C.

NOTE

1. Do not make the folding lines except the specified positions for the FFC.

[24 pin FFC]

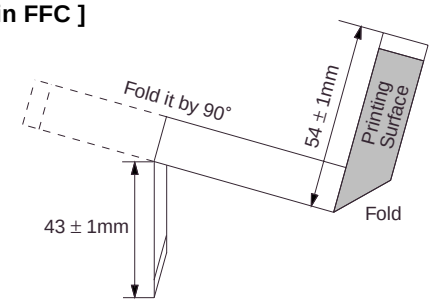

Fig. 2-8-A

[5 pin FFC]

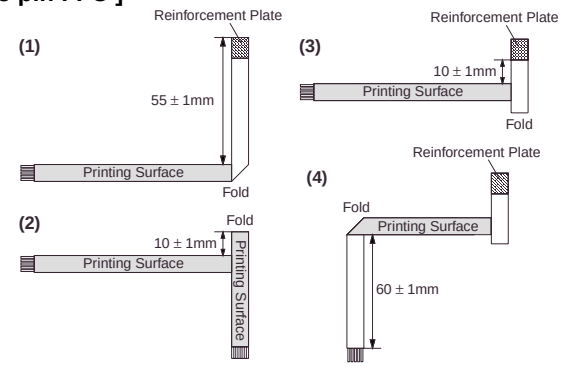

• Proceed the steps (1) through (4).

Fig. 2-8-B

[6 pin FFC]

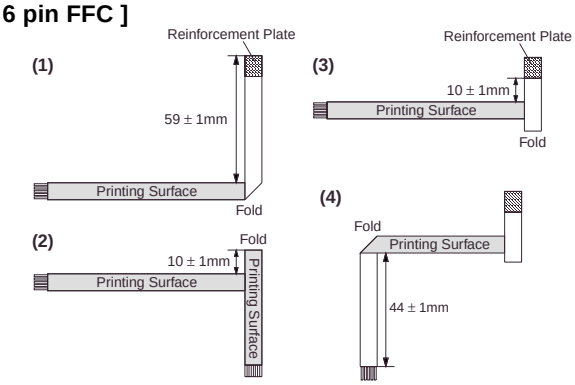

• Proceed the steps (1) through (4).

Fig. 2-8-C

DISASSEMBLY INSTRUCTIONS

3. REMOVAL OF ANODE CAP

Read the following **NOTED** items before starting work.

* After turning the power off there might still be a potential voltage that is very dangerous. When removing the Anode Cap, make sure to discharge the Anode Cap's potential voltage.
* Do not use pliers to loosen or tighten the Anode Cap terminal, this may cause the spring to be damaged.

REMOVAL

1. Follow the steps as follows to discharge the Anode Cap. **(Refer to Fig. 3-1.)**
   Connect one end of an Alligator Clip to the metal part of a flat-blade screwdriver and the other end to ground.
   While holding the plastic part of the insulated Screwdriver, touch the support of the Anode with the tip of the Screwdriver.
   A cracking noise will be heard as the voltage is discharged.

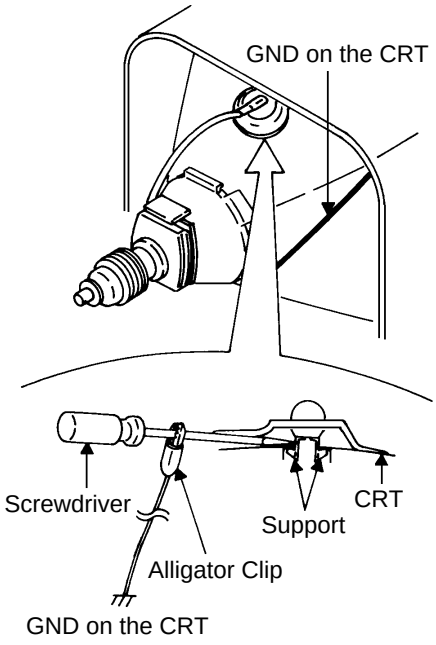

Fig. 3-1

2. Flip up the sides of the Rubber Cap in the direction of the arrow and remove one side of the support. **(Refer to Fig. 3-2.)**

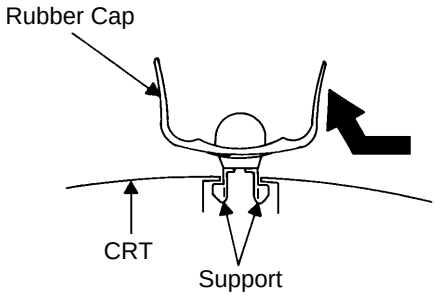

Fig. 3-2

3. After one side is removed, pull in the opposite direction to remove the other.

NOTE

Take care not to damage the Rubber Cap.

INSTALLATION

1. Clean the spot where the cap was located with a small amount of alcohol. **(Refer to Fig. 3-3.)**

NOTE

Confirm that there is no dirt, dust, etc. at the spot where the cap was located.

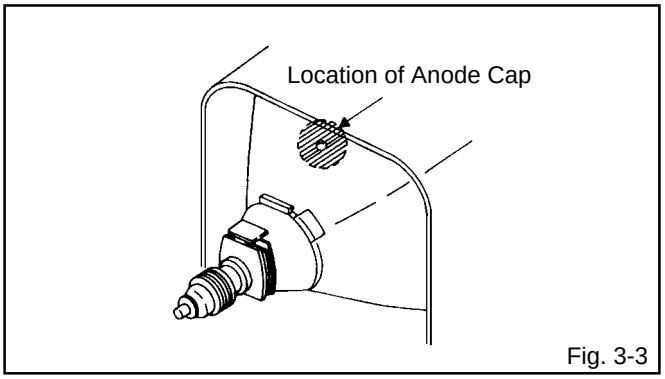

Fig. 3-3

2. Arrange the wire of the Anode Cap and make sure the wire is not twisted.
3. Turn over the Rubber Cap. **(Refer to Fig. 3-4.)**

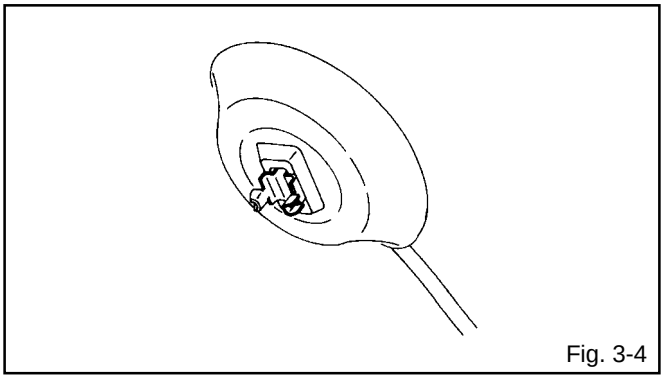
Fig. 3-4

4. Insert one end of the Anode Support into the anode button, then the other as shown in **Fig. 3-5**.

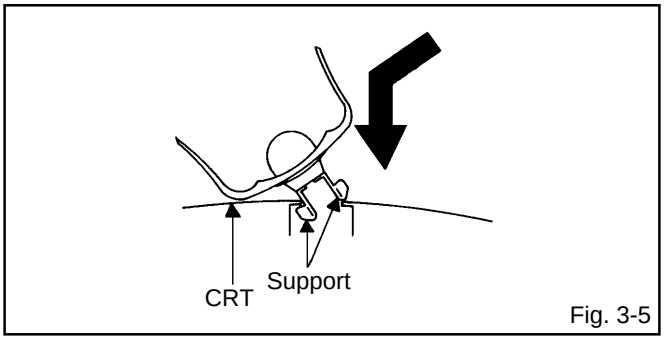

Fig. 3-5

5. Confirm that the Support is securely connected.
6. Put on the Rubber Cap without moving any parts.

DISASSEMBLY INSTRUCTIONS

4. REMOVAL AND INSTALLATION OF FLAT PACKAGE IC

REMOVAL

1. Put Masking Tape (cotton tape) around the Flat Package IC to protect other parts from any damage. **(Refer to Fig. 4-1.)**

   NOTE

   Masking is carried out on all the parts located within 10 mm distance from IC leads.

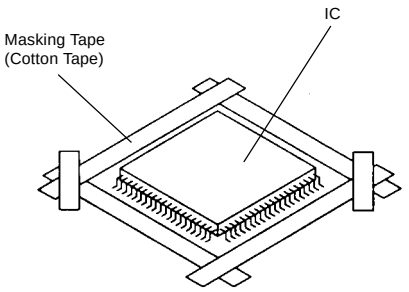

Fig. 4-1

2. Heat the IC leads using a blower type IC desoldering machine. **(Refer to Fig. 4-2.)**

   NOTE

   Do not rotate or move the IC back and forth , until IC can move back and forth easily after desoldering the leads completely.

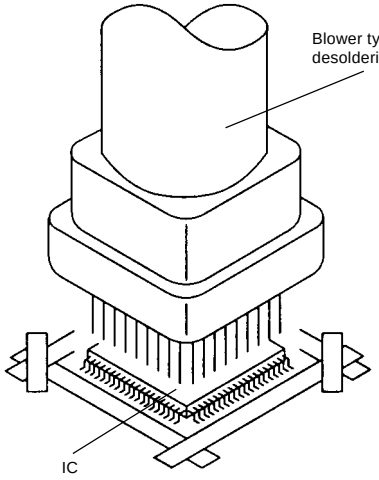

Fig. 4-2

3. When IC starts moving back and forth easily after desoldering completely, pickup the corner of the IC using a tweezers and remove the IC by moving with the IC desoldering machine. **(Refer to Fig. 4-3.)**

   NOTE

   Some ICs on the PCB are affixed with glue, so be careful not to break or damage the foil of each IC leads or solder lands under the IC when removing it.

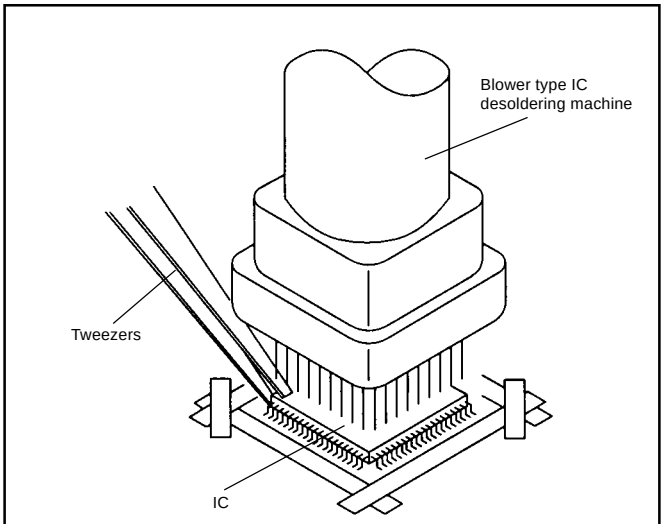

Fig. 4-3

4. Peel off the Masking Tape.
5. Absorb the solder left on the pattern using the Braided Shield Wire. **(Refer to Fig. 4-4.)**

   NOTE

   Do not move the Braided Shield Wire in the vertical direction towards the IC pattern.

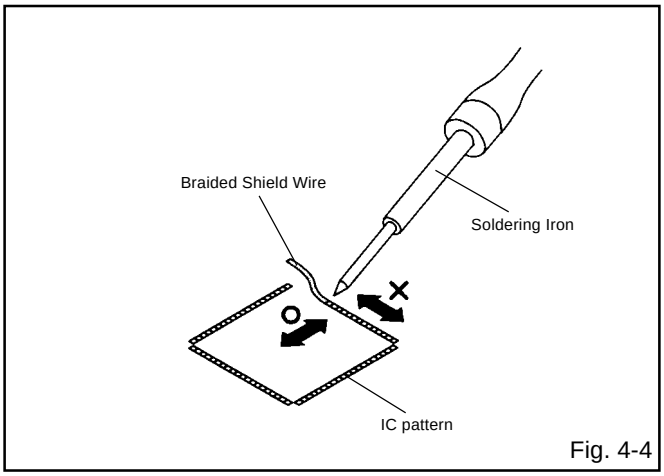

Fig. 4-4

DISASSEMBLY INSTRUCTIONS

INSTALLATION

1. Take care of the polarity of new IC and then install the new IC fitting on the printed circuit pattern. Then solder each lead on the diagonal positions of IC temporarily. **(Refer to Fig. 4-5.)**

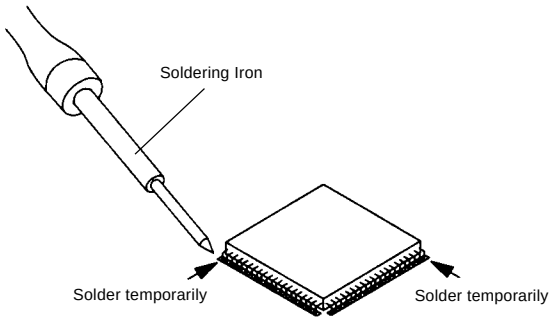

Fig. 4-5

2. Supply the solder from the upper position of IC leads sliding to the lower position of the IC leads. **(Refer to Fig. 4-6.)**

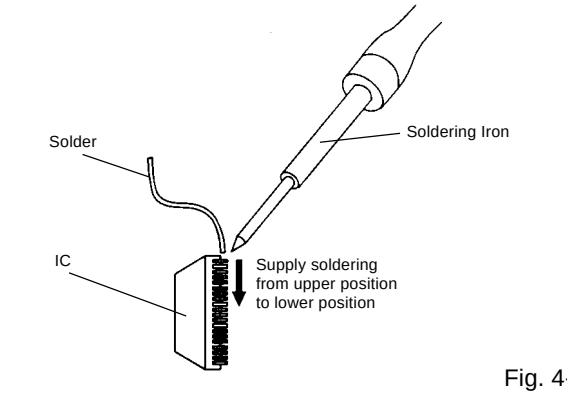

Fig. 4-6

3. Absorb the solder left on the lead using the Braided Shield Wire. **(Refer to Fig. 4-7.)**

   NOTE

   Do not absorb the solder to excess.

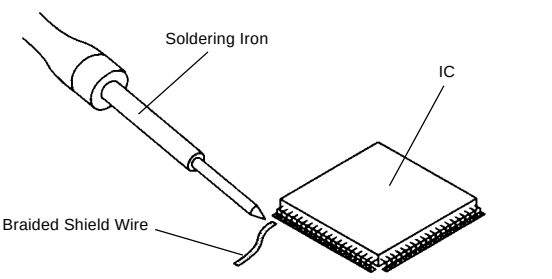

Fig. 4-7

4. When bridge-soldering between terminals and/or the soldering amount are not enough, resolder using a Thin-tip Soldering Iron. **(Refer to Fig. 4-8.)**

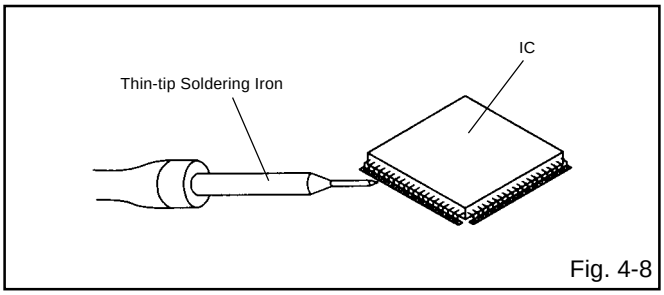

Fig. 4-8

5. Finally, confirm the soldering status on four sides of the IC using a magnifying glass.
   Confirm that no abnormality is found on the soldering position and installation position of the parts around the IC. If some abnormality is found, correct by resoldering.

   NOTE

   When the IC leads are bent during soldering and/or repairing, do not repair the bending of leads. If the bending of leads are repaired, the pattern may be damaged. So, always be sure to replace the IC in this case.

SERVICE MODE LIST

This unit is provided with the following SERVICE MODES so you can repair, examine and adjust easily.

To enter to the SERVICE MODE function, press and hold both buttons simultaneously on the main unit and on the remote control for more than the standard time (second).

Set Condition	Set Key	Remocon Key	Standard Time	Operations
TV mode	VOL. DOWN (Minimum)	0	2 sec.	Releasing of V-CHIP PASSWORD.
TV mode	VOL. DOWN (Minimum)	1	2 sec.	Initialization of factory TV data. NOTE: Do not use this for normal servicing. If you set factory initialization, the memories are reset such as the channel setting, and the POWER ON total hours.
DVD mode (No disc)	VOL. DOWN (Minimum)	4	2 sec.	Initialization of factory DVD data. NOTE: Do not use this for normal servicing. The function will only work without the setting of DVD disc at DVD mode.
TV mode	VOL. DOWN (Minimum)	6	2 sec.	POWER ON total hours are displayed on the screen. Refer to the "PREVENTIVE CHECKS AND SERVICE INTERVALS" (CONFIRMATION OF HOURS USED). Can check the INITIAL DATA of MEMORY IC. Refer to the "WHEN REPLACING EEPROM (MEMORY) IC".
ALL mode	VOL. DOWN (Minimum)	9	2 sec.	Display of the Adjustment MENU on the screen. Refer to the "ELECTRICAL ADJUSTMENT" (On-Screen Display Adjustment).
DVD mode (No disc)	STOP	7	3 sec.	Releasing of PARENTAL LOCK. Refer to the “PARENTAL CONTROL - RATING LEVEL”. NOTE: The function will only work without the setting of DVD disc at DVD mode.
DVD mode	STOP	9	3 sec.	Tray cannot be opened. Refer to the “TRAY LOCK”. NOTE: No indications on the screen when the Tray Lock is setting.

CONFIRMATION OF HOURS USED

POWER ON total hours can be checked on the screen. Total hours are displayed in 16 system of notation.

NOTE: If you set a factory initialization, the total hours is reset to "0".

1. Turn on the POWER, and set to the TV mode.
2. Set the VOLUME to minimum.
3. Press both VOL. DOWN button on the set and Channel button **(6)** on the remote control for more than 2 seconds.
4. After the confirmation of using hours, turn off the power.

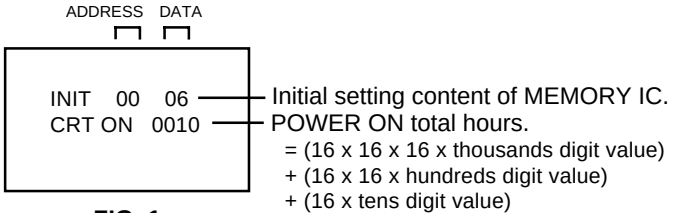

FIG. 1

WHEN REPLACING EEPROM (MEMORY) IC

If a service repair is undertaken where it has been required to change the MEMORY IC, the following steps should be taken to ensure correct data settings while making reference to TABLE 1.

NOTE: No need to set data for after position INI 27.

INI	+0	+1	+2	+3	+4	+5	+6	+7	+8	+9	+A	+B	+C	+D	+E	+F
00	06	3F	59	05	D1	02	30	25	12	57	23	00	D8	40	0F	4F
10	60	50	50	65	45	8C	E3	50	50	78	55	3A	A0	11	00	00
20	80	88	83	88	89	88	FF	00	---	---	---	---	---	---	---	---

Table 1

1. Turn on the POWER, and set to the TV mode.
2. Enter DATA SET mode by setting VOLUME to minimum.
3. Press both VOL. DOWN button on the set and Channel button **(6)** on the remote control for more than 2 seconds. ADDRESS and DATA should appear as FIG 1.

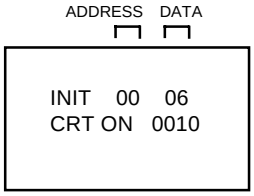

FIG. 1

4. ADDRESS is now selected and should "blink". Using the VOL. UP/DOWN button on the remote, step through the ADDRESS until required ADDRESS to be changed is reached.
5. Press ENTER to select DATA. When DATA is selected, it will "blink".
6. Again, step through the DATA using VOL. UP/DOWN button until required DATA value has been selected.
7. Pressing ENTER will take you back to ADDRESS for further selection if necessary.
8. Repeat steps 4 to 7 until all data has been checked.
9. When satisfied correct DATA has been entered, turn POWER off (return to STANDBY MODE) to finish DATA input.

After the data input, set to the initializing of shipping.

10. Turn on the POWER, and set to the TV mode.
11. Press both VOL. DOWN button on the set and Channel button **(1)** on the remote control for more than 2 seconds.
12. After the finishing of the initializing of shipping, the unit will turn off automatically.

The unit will now have the correct DATA for the new MEMORY IC.

ELECTRICAL ADJUSTMENTS

1. BEFORE MAKING ELECTRICAL ADJUSTMENTS

Read and perform these adjustments when repairing the circuits or replacing electrical parts or PCB assemblies.

CAUTION

- Use an isolation transformer when performing any service on this chassis.
- Before removing the anode cap, discharge electricity because it contains high voltage.
- When removing a PCB or related component, after unfastening or changing a wire, be sure to put the wire back in its original position.
- When you exchange IC and Transistor with a heat sink, apply silicon grease on the contact section of the heat sink. Before applying new silicon grease, remove all the old silicon grease. (Old grease may cause damages to the IC and Transistor).

Prepare the following measurement tools for electrical adjustments.

1. Oscilloscope
2. Digital Voltmeter
3. AC Voltmeter
4. Pattern Generator
5. Multi-Sound Signal Generator

On-Screen Display Adjustment

1. Set the VOLUME to minimum.
2. Press the VOL. DOWN button on the set and the Channel button **(9)** on the remote control for more than 2 seconds to appear the adjustment mode on the screen as shown in **Fig. 1-1**.

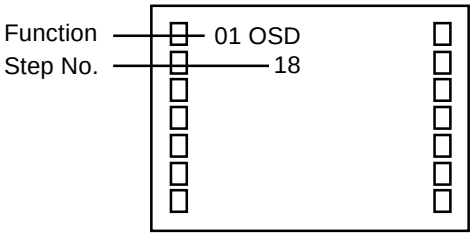

Fig. 1-1

3. Use the Channel UP/DOWN button or Channel button **(1-0)** on the remote control to select the options shown in **Fig. 1-2**.
4. Press the MENU button on the remote control to end the adjustments.

NO.	FUNCTION	NO.	FUNCTION
01	OSD	38	COLNA
02	OSDC	39	TNTCA
03	CUT OFF	40	SHRPA
04	HPOSI	41	SBIASA
05	HBLKL	42	BRTCD
06	HBLKR	43	BRTXD
07	VSIZE	44	BRTND
08	VPOSI	45	CNTCD
09	VLIN	46	CNTXD
10	VSC	47	CNTND
11	VCOMP	48	COLCD
12	RCUT	49	COLXD
13	GCUT	50	COLND
14	BCUT	51	TNTCD
15	RDRV	52	SHRPD
16	GDRV	53	SBIASD
17	BDRV	54	BRTCG
18	BRTC	55	BRTXG
19	BRTX	56	BRTNG
20	BRTN	57	CNTCG
21	CNTC	58	CNTXG
22	CNTX	59	CNTNG
23	CTN	60	SBIASG
24	COLC	61	TVM
25	COLX	62	PVM
26	COLN	63	LVL
27	TNTC	64	SEPAL
28	SHRP	65	SEPAH
29	SBIAS	68	HFREQ
30	BRTCA	69	E/WDC
31	BRTXA	70	E/WAMP
32	BRTNA	71	E/WTILT
33	CNTCA	72	CORTOP
34	CNTXA	73	CORBTM
35	CNTNA	74	HCOMP
36	COLCA	75	HBLKLA
37	COLXA	76	HBLKRA

Fig. 1-2

2. BASIC ADJUSTMENTS

2-1: CONSTANT VOLTAGE

1. Place the set in AV MODE without signal.
2. Using the remote control, set the brightness and contrast to normal position.
3. Connect the digital voltmeter to **TP401**.
4. Adjust the **VR3800** until the digital voltmeter is 117 ± 0.5V.

2-2: FOCUS

1. Receive the monoscope pattern.
2. Turn the Focus Volume fully counterclockwise once.
3. Adjust the **Focus Volume** until picture is distinct.

2-3: CUT OFF

1. Adjust the unit to the following settings.
   R CUT OFF=7F, G CUT OFF=7F, B CUT OFF=7F,
   R DRIVE=3F, G DRIVE=07, B DRIVE=3F
2. Place the set with Aging Test for more than 15 minutes.
3. Set condition is AV MODE without signal.
4. Using the remote control, set the brightness and contrast to normal position.
5. Activate the adjustment mode display of **Fig. 1-1** and press the channel button **(03)** on the remote control to select "CUT OFF".
6. Adjust the **Screen Volume** until a dim raster is obtained.

ELECTRICAL ADJUSTMENTS

2-4: WHITE BALANCE

NOTE: Adjust after performing CUT OFF adjustment.

1. Place the set with Aging Test for more than 15 minutes.
2. Receive the gray scale pattern from the Pattern Generator.
3. Using the remote control, set the brightness and contrast to normal position.
4. Activate the adjustment mode display of **Fig. 1-1** and press the channel button **(16)** on the remote control to select "G DRIVE".
5. Press the CH. UP/DOWN button on the remote control to select the "R CUT OFF", "G CUT OFF", "B CUT OFF", "R DRIVE" or "B DRIVE".
6. Adjust the RIGHT/LEFT button on the remote control to whiten the R CUT OFF, G CUT OFF, B CUT OFF, R DRIVE, and B DRIVE at each step tone sections equally.
7. Perform the above adjustments 5 and 6 until the white color is achieved.

2-5: HORIZONTAL POSITION

1. Receive the monoscope pattern.
2. Using the remote control, set the brightness and contrast to normal position.
3. Activate the adjustment mode display of **Fig. 1-1** and press the channel button **(04)** on the remote control to select "HPOSI".
4. Press the RIGHT/LEFT button on the remote control until the SHIFT quantity of the OVER SCAN on right and left becomes minimum.

2-6: HORIZONTAL SIZE

1. Receive the monoscope pattern.
2. Using the remote control, set the brightness and contrast to normal position.
3. Activate the adjustment mode display of **Fig. 1-1** and press the channel button **(69)** on the remote control to select "E/WDC".
4. Press the RIGHT/LEFT button on the remote control until the SHIFT quantity of the OVER SCAN on right and left becomes 12 ± 2%.

2-7: VERTICAL POSITION

1. Receive the monoscope pattern.
2. Using the remote control, set the brightness and contrast to normal position.
3. Activate the adjustment mode display of **Fig. 1-1** and press the channel button **(08)** on the remote control to select "VPOSI".
4. Check if the step No. V POSI is "02".
5. Adjust the **VR404** until the horizontal line becomes fit to notch of the shadow mask.

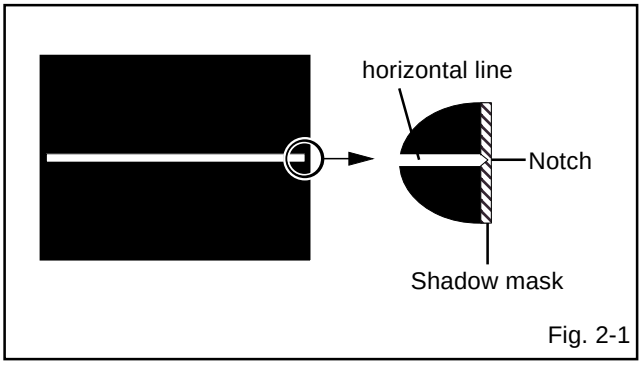

Fig. 2-1

2-8: VERTICAL SIZE

1. Receive the monoscope pattern.
2. Using the remote control, set the brightness and contrast to normal position.
3. Activate the adjustment mode display of **Fig. 1-1** and press the channel button **(07)** on the remote control to select "VSIZE".
4. Press the RIGHT/LEFT button on the remote control until the SHIFT quantity of the OVER SCAN on upside and downside becomes 10 ± 2%.
5. Receive a broadcast and check if the picture is normal.

2-9: VERTICAL LINEARITY

NOTE: Adjust after performing adjustments in section 2-7. After the adjustment of Vertical Linearity, reconfirm the Vertical Position and Vertical Size adjustments.

1. Receive the monoscope pattern.
2. Using the remote control, set the brightness and contrast to normal position.
3. Activate the adjustment mode display of **Fig. 1-1** and press the channel button **(09)** on the remote control to select "VLIN".
4. Press the RIGHT/LEFT button on the remote control until the SHIFT quantity of the OVER SCAN on upside and downside becomes minimum.

2-10: TRAPEZIUM

1. Receive the crosshatch signal from the Pattern Generator.
2. Using the remote control, set the brightness and contrast to normal position.
3. Activate the adjustment mode display of **Fig. 1-1** and press the channel button **(71)** on the remote control to select "E/WTILT".
4. Press the RIGHT/LEFT button on the remote control until the both vertical lines of the screen become parallel.

2-11: PARABOLA

1. Receive the crosshatch signal from the Pattern Generator.
2. Using the remote control, set the brightness and contrast to normal position.
3. Activate the adjustment mode display of **Fig. 1-1** and press the channel button **(70)** on the remote control to select "E/WAMP".
4. Press the RIGHT/LEFT button on the remote control until the right and left vertical lines are straight.

ELECTRICAL ADJUSTMENTS

2-12: SEPARATION

1. Set the multi-sound signal generator L-ch=1KHz, R-ch =Non input and receive the RF signal.
2. Connect the oscilloscope to the **SP351 code**.
3. Press the AUDIO SELECT button on the remote control to set to the stereo mode.
4. Activate the adjustment mode display of **Fig. 1-1** and press the channel button **(64)** on the remote control to select "SEPAL".
5. Press the RIGHT/LEFT button on the remote control to adjust it until the R-ch output becomes minimum.
6. Press the CH UP button 1 time to set to "SEPAH" mode.
7. Press the RIGHT/LEFT button on the remote control to adjust it until the R-ch output becomes minimum.
8. Set the multi-sound signal generator L-ch=Non input, R-ch=1KHz and receive the RF signal.
9. Connect the oscilloscope to the **SP352 code**. Then perform the above adjustments 3~7.

2-13: OSD POSITION

1. Activate the adjustment mode display of **Fig. 1-1**.
2. Press the RIGHT/LEFT button on the remote control until the difference of A and B becomes minimum. **(Refer to Fig. 2-2)**

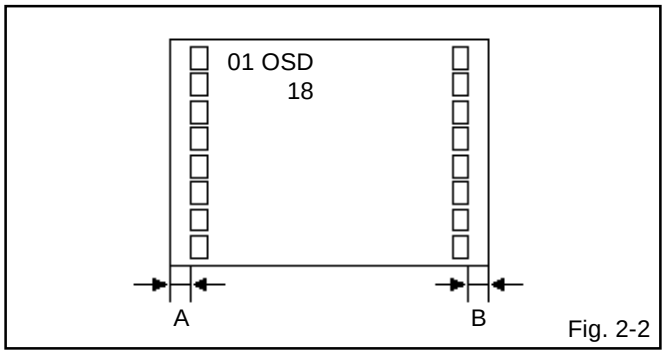

Fig. 2-2

2-14: LEVEL

1. Receive the VHF HIGH (70dB).
2. Connect the AC voltmeter to **pin 6 and pin 1 of CP101**.
3. Activate the adjustment mode display of **Fig. 1-1** and press the channel button **(63)** on the remote control to select "LVL".
4. Press the RIGHT/LEFT button on the remote control until the AC voltmeter is 70 ± 2mV.

2-15: BRIGHT CENTER

1. Receive the monoscope pattern. (RF Input)
2. Using the remote control, set the brightness and contrast to normal position.
3. Activate the adjustment mode display of **Fig. 1-1** and press the channel button **(18)** on the remote control to select "BRTC".
4. Press the RIGHT/LEFT button on the remote control until the white 10% is starting to be visible
5. Receive the monoscope pattern. (Audio Video Input)
6. Press the INPUT SELECT button on the remote control to set to the AV mode.
7. Using the remote control, set the brightness and contrast to normal position.
8. Activate the adjustment mode display of **Fig. 1-1** and press the channel button **(30)** on the remote control to select "BRTCA".
9. Press the RIGHT/LEFT button on the remote control until the white 10% is starting to be visible
10. Press the TV/DVD button on the remote control to set to the DVD mode.
11. Activate the adjustment mode display of **Fig. 1-1** and press the channel button **(42)** on the remote control to select "BRTCD".
12. Press the RIGHT/LEFT button on the remote control to set the same step numbers as the AV.
13. Press the GAME button on the remote control to set to the GAME mode.
14. Activate the adjustment mode display of **Fig. 1-1** and press the channel button **(54)** on the remote control to select "BRTCG".
15. Press the RIGHT/LEFT button on the remote control to set the same step numbers as the AV.

ELECTRICAL ADJUSTMENTS

2-16: TINT

1. Receive the color bar pattern. (RF Input)
2. Using the remote control, set the brightness, contrast, color and tint to normal position.
3. Connect the oscilloscope to **TP022**.
4. Activate the adjustment mode display of **Fig. 1-1** and press the channel button **(27)** on the remote control to select "TNTC".
5. Press the RIGHT/LEFT button on the remote control until the section "A" becomes a straight line. **(Refer to Fig. 2-3)**
6. Receive the color bar pattern. (Audio Video Input)
7. Press the INPUT SELECT button on the remote control to set to the AV mode.
8. Using the remote control, set the brightness, contrast, color and tint to normal position.
9. Activate the adjustment mode display of **Fig. 1-1** and press the channel button **(39)** on the remote control to select "TNTCA".
10. Press the RIGHT/LEFT button on the remote control until the section "A" becomes a straight line. **(Refer to Fig. 2-3)**
11. Press the TV/DVD button on the remote control to set to the DVD mode.
12. Activate the adjustment mode display of **Fig. 1-1** and press the channel button **(51)** on the remote control to select "TNTCD".
13. Press the RIGHT/LEFTbutton on the remote control until the tint step No. becomes "35".

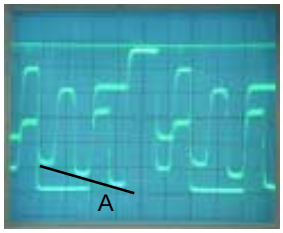

Fig. 2-3

2-17: COLOR CENTER

1. Receive the color bar pattern. (RF Input)
2. Using the remote control, set the brightness, contrast, color and tint to normal position.
3. Connect the oscilloscope to **TP024**.
4. Activate the adjustment mode display of **Fig. 1-1** and press the channel button **(24)** on the remote control to select "COLC".
5. Adjust the VOLTS RANGE VARIABLE knob of the oscilloscope until the range between white 100% and 0% is set to 4 scales on the screen of the oscilloscope.
6. Press the RIGHT/LEFT button on the remote control until the red color level is adjusted to 110 ± 5% of the white level. **(Refer to Fig. 2-4)**
7. Receive the color bar pattern. (Audio Video Input)
8. Press the INPUT SELECT button on the remote control to set to the AV mode.
9. Using the remote control, set the brightness, contrast, color and tint to normal position.
10. Activate the adjustment mode display of **Fig. 1-1** and press the channel button **(36)** on the remote control to select "COLCA".
11. Adjust the VOLTS RANGE VARIABLE knob of the oscilloscope until the range between white 100% and 0% is set to 4 scales on the screen of the oscilloscope.
12. Press the RIGHT/LEFT button on the remote control until the red color level is adjusted to 110 ± 5% of the white level. **(Refer to Fig. 2-4)**
13. Press the TV/DVD button on the remote control to set to the DVD mode.
14. Activate the adjustment mode display of **Fig. 1-1** and press the channel button **(48)** on the remote control to select "COLCD".
15. Press the RIGHT/LEFT button on the remote control until the color step No. becomes "57".

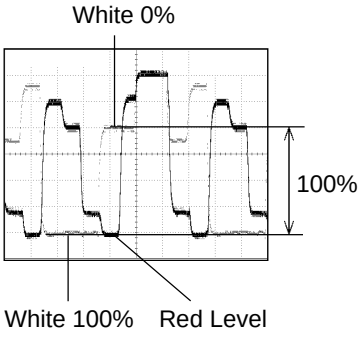

Fig. 2-4

ELECTRICAL ADJUSTMENTS

2-18: CONTRAST MAX

1. Activate the adjustment mode display of **Fig. 1-1** and press the channel button **(22)** on the remote control to select "CNTX".
2. Press the RIGHT/LEFT button on the remote control until the contrast step No. becomes "58"
3. Receive a broadcast and check if the picture is normal.
4. Press the INPUT SELECT button on the remote control to set to the AV mode.
5. Activate the adjustment mode display of **Fig. 1-1** and press the channel button **(34)** on the remote control to select "CNTXA".
6. Press the RIGHT/LEFT button on the remote control to set the same step numbers as the TV.
7. Receive a broadcast and check if the picture is normal.
8. Press the TV/DVD button on the remote control to set to the DVD mode.
9. Activate the adjustment mode display of **Fig. 1-1** and press the channel button **(46)** on the remote control to select "CNTXD".
10. Press the VOL. UP/DOWN button on the remote control to set the same step numbers as the AV.
11. Press the GAME button on the remote control to set to the GAME mode.
12. Activate the adjustment mode display of **Fig. 1-1** and press the channel button **(58)** on the remote control to select "CNTXG".
13. Press the VOL. UP/DOWN button on the remote control to set the same step numbers as the AV.

2-19: Confirmation of Fixed Value (Step No.)

Please check if the fixed values of the each adjustment items are set correctly referring below.

NO.	FUNCTION	STEP NO.	NO.	FUNCTION	STEP NO.
02	OSD CONTRAST	02	43	BRI. DVD(MAX)	4A
05	H.BLK L	05	44	BRI. DVD(MIN)	15
06	H.BLK R	02	45	CONT. DVD(CENT.)	30
10	V S CORRECTION	04	47	CONT. DVD(MIN)	15
11	V.COMP	02	49	COL. DVD(MAX)	7F
16	G DRIVE	07	50	COL. DVD(MIN)	07
19	BRIGHTNESS(MAX)	4A	52	SHARPNESS DVD	1A
20	BRIGHTNESS(MIN)	15	53	SUB BIAS	50
21	CONTRAST(CENT.)	30	55	BRI. GAME(MAX)	4A
23	CONTRAST(MIN)	15	56	BRI. GAME(MIN)	15
25	COLOR(MAX)	7F	57	CONT. GAME(CENT.)	30
26	COLOR(MIN)	07	59	CONT. GAME(MIN)	15
28	SHARPNESS	20	60	SUB BIAS	50
29	SUB BIAS	50	61	TUNING V MUTE	00
31	BRI. AV(MAX)	4A	62	POWER ON V MUTE	40
32	BRI. AV(MIN)	15	68	H.FREQ	20
33	CONT. AV(CENT.)	30	72	EAST/WEST COR.TOP	09
35	CONT. AV(MIN)	15	73	EAST/WEST COR.BOP	0A
37	COL. AV(MAX)	7F	74	H.SIZE COMP	02
38	COL. AV(MIN)	07	75	H.BLK L AV	05
40	SHARPNESS AV	20	76	H.BLK R AV	02
41	SUB BIAS	50			

ELECTRICAL ADJUSTMENTS

3. PURITY AND CONVERGENCE ADJUSTMENTS

NOTE

1. Turn the unit on and let it warm up for at least 30 minutes before performing the following adjustments.
2. Place the CRT surface facing east or west to reduce the terrestrial magnetism.
3. Turn ON the unit and demagnetize with a Degauss Coil.

3-1: STATIC CONVERGENCE (ROUGH ADJUSTMENT)

1. Tighten the screw for the magnet. Refer to the adjusted CRT for the position. **(Refer to Fig. 3-1)**
   If the deflection yoke and magnet are in one body, untighten the screw for the body.
2. Receive the green raster pattern from the color bar generator.
3. Slide the deflection yoke until it touches the funnel side of the CRT.
4. Adjust center of screen to green, with red and blue on the sides, using the pair of purity magnets.
5. Switch the color bar generator from the green raster pattern to the crosshatch pattern.
6. Combine red and blue of the 3 color crosshatch pattern on the center of the screen by adjusting the pair of 4 pole magnets.
7. Combine red/blue (magenta) and green by adjusting the pair of 6 pole magnets.
8. Adjust the crosshatch pattern to change to white by repeating steps 6 and 7.

3-2: PURITY

NOTE

Adjust after performing adjustments in section 3-1.

1. Receive the green raster pattern from color bar generator.
2. Adjust the pair of purity magnets to center the color on the screen.
   Adjust the pair of purity magnets so the color at the ends are equally wide.
3. Move the deflection yoke backward (to neck side) slowly, and stop it at the position when the whole screen is green.
4. Confirm red and blue colors.
5. Adjust the slant of the deflection yoke while watching the screen, then tighten the fixing screw.

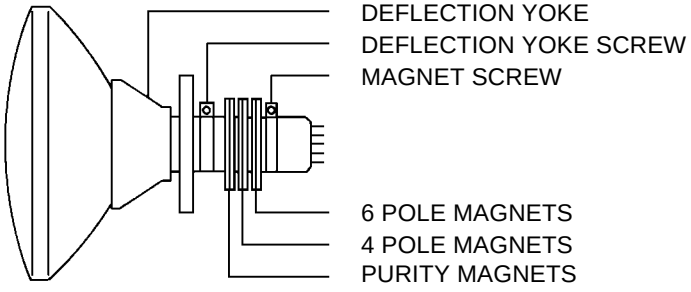

Fig. 3-1

3-3: STATIC CONVERGENCE

NOTE

Adjust after performing adjustments in section 3-2.

1. Receive the crosshatch pattern from the color bar generator.
2. Combine red and blue of the 3 color crosshatch pattern on the center of the screen by adjusting the pair of 4 pole magnets.
3. Combine red/blue (magenta) and green by adjusting the pair of 6 pole magnets.

3-4: DYNAMIC CONVERGENCE

NOTE

Adjust after performing adjustments in section 3-3.

1. Adjust the differences around the screen by moving the deflection yoke upward/downward and right/left. **(Refer to Fig. 3-2-a)**
2. Insert three wedges between the deflection yoke and CRT funnel to fix the deflection yoke. **(Refer to Fig. 3-2-b)**

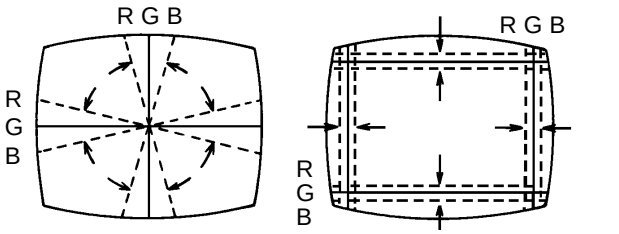

UPWARD/DOWNWARD SLANT RIGHT/LEFT SLANT

Fig. 3-2-a

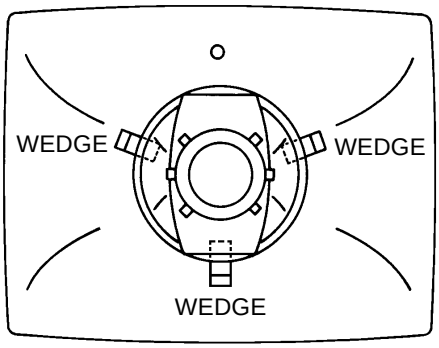

WEDGE POSITION

Fig. 3-2-b

ELECTRICAL ADJUSTMENTS

4. ELECTRICAL ADJUSTMENT PARTS LOCATION GUIDE (WIRING CONNECTION)

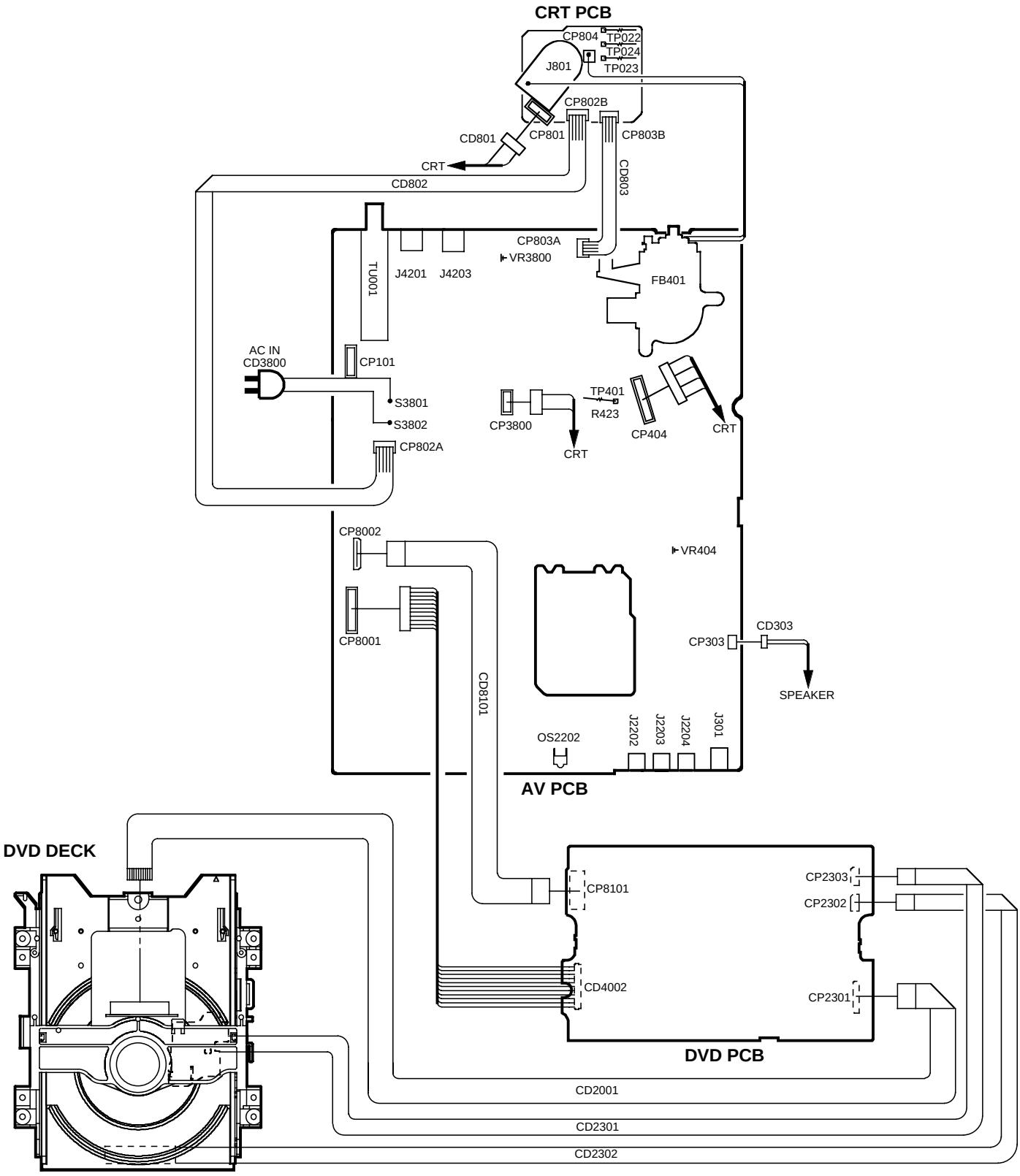

DVD BLOCK DIAGRAM

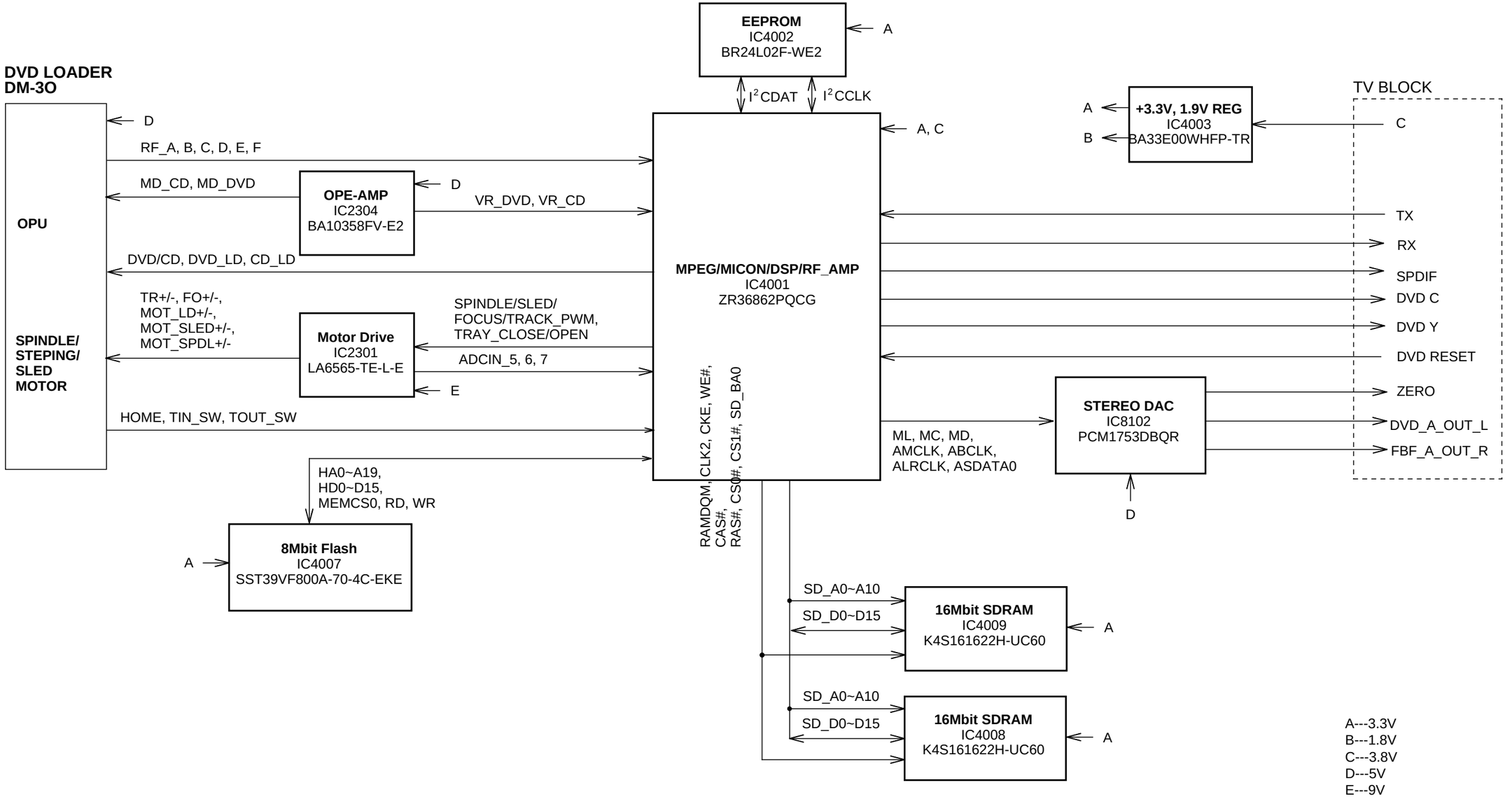

TV BLOCK DIAGRAM

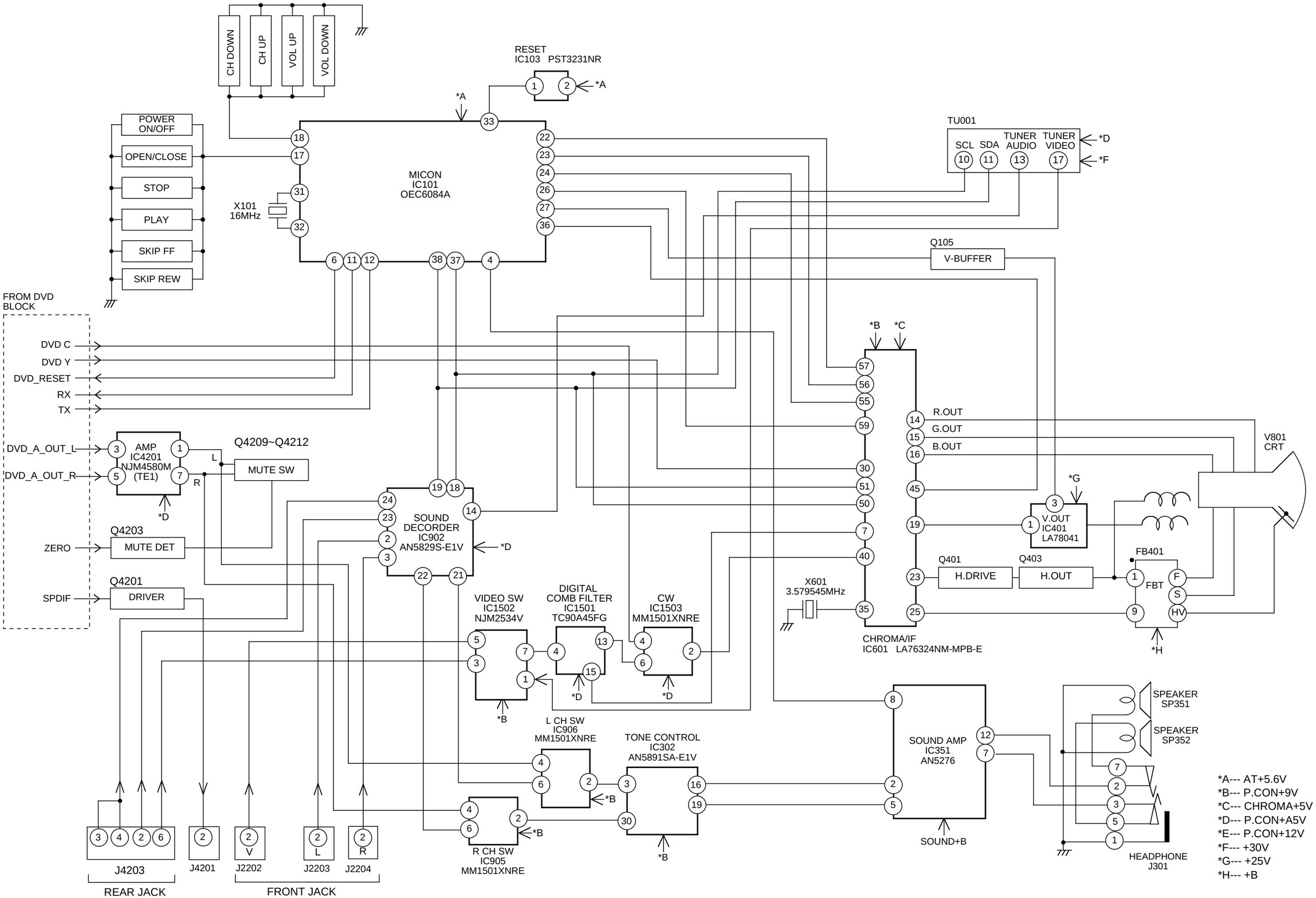

POWER BLOCK DIAGRAM

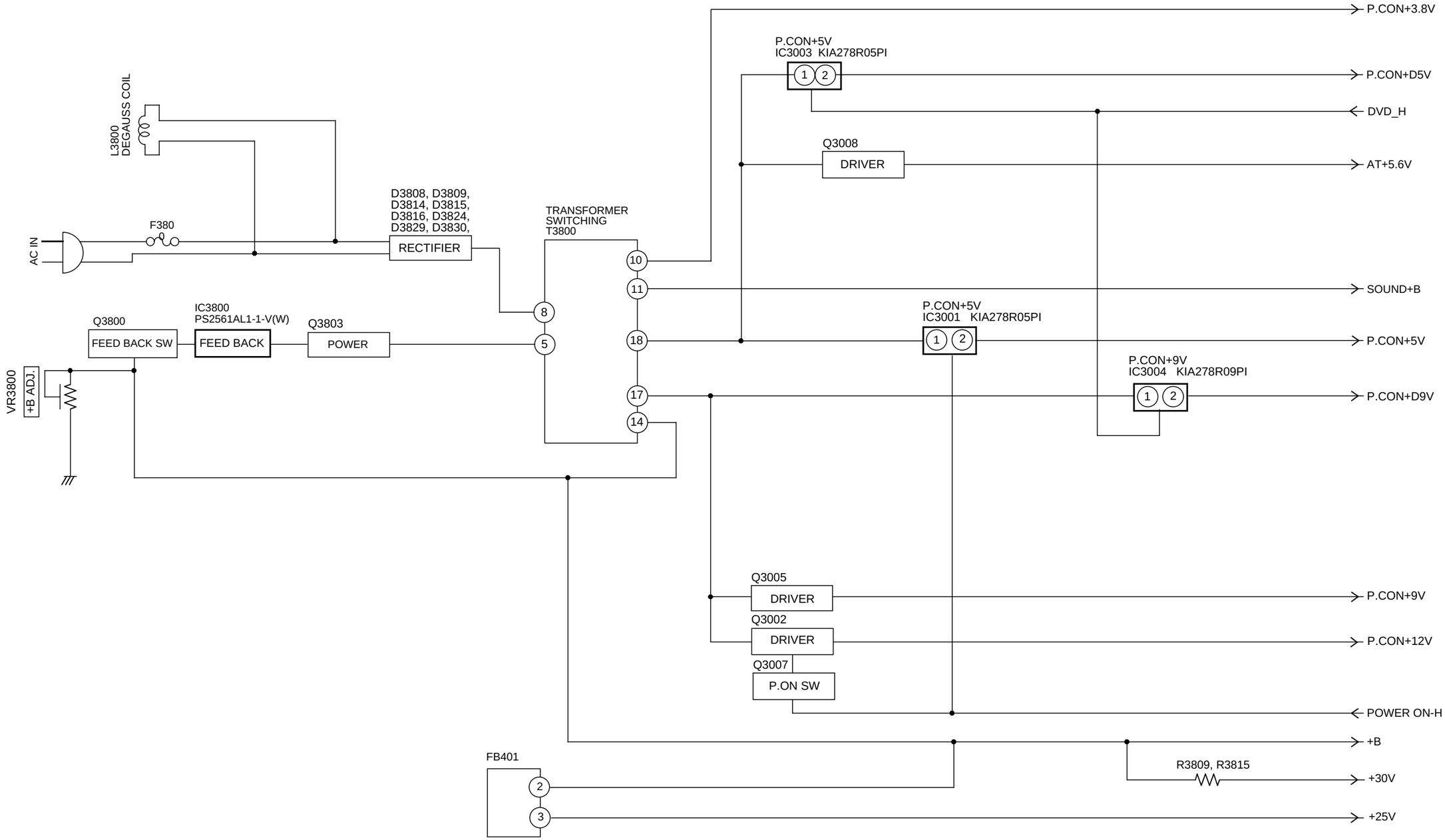

PRINTED CIRCUIT BOARDS

DVD (TOP SIDE)

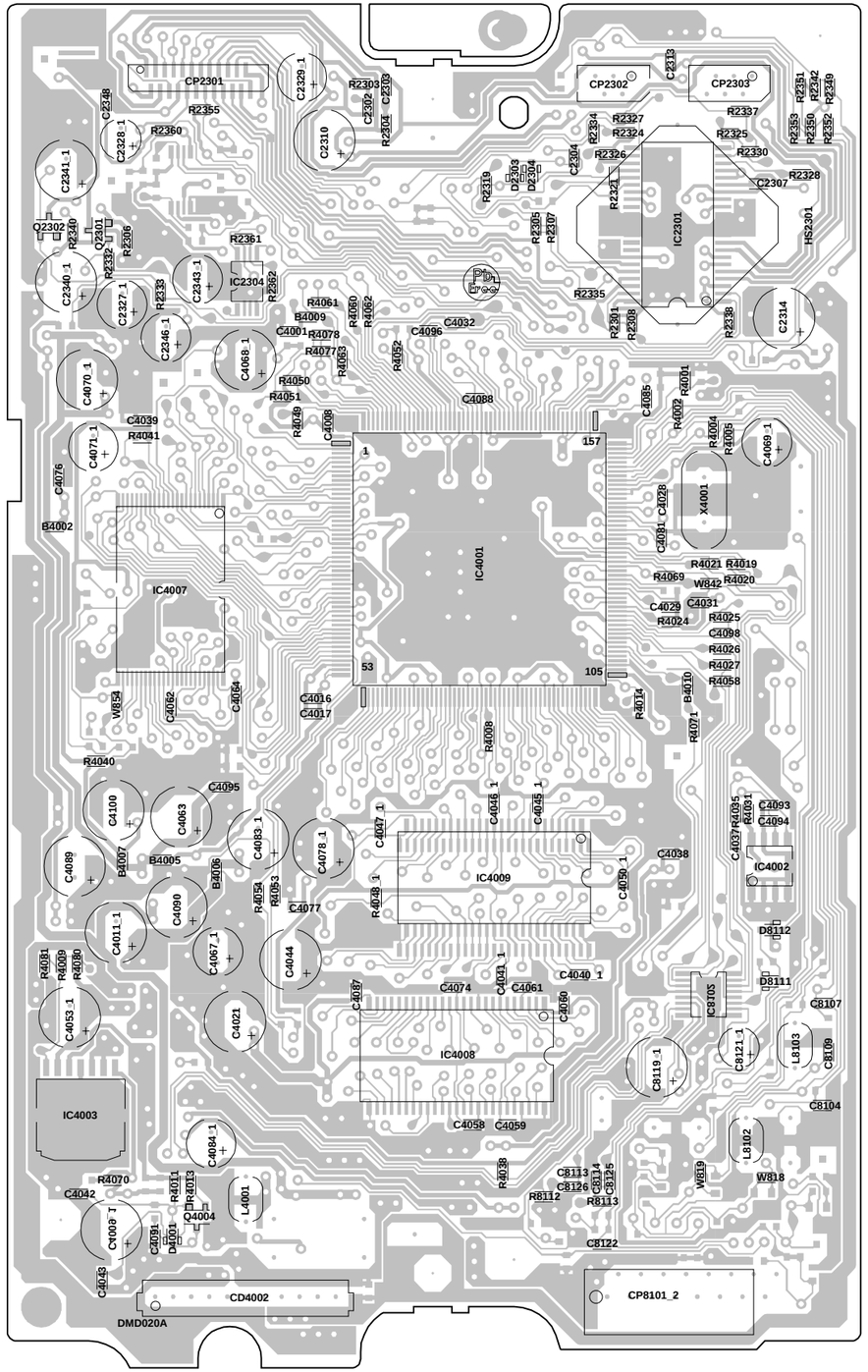

DVD (BOTTOM SIDE)

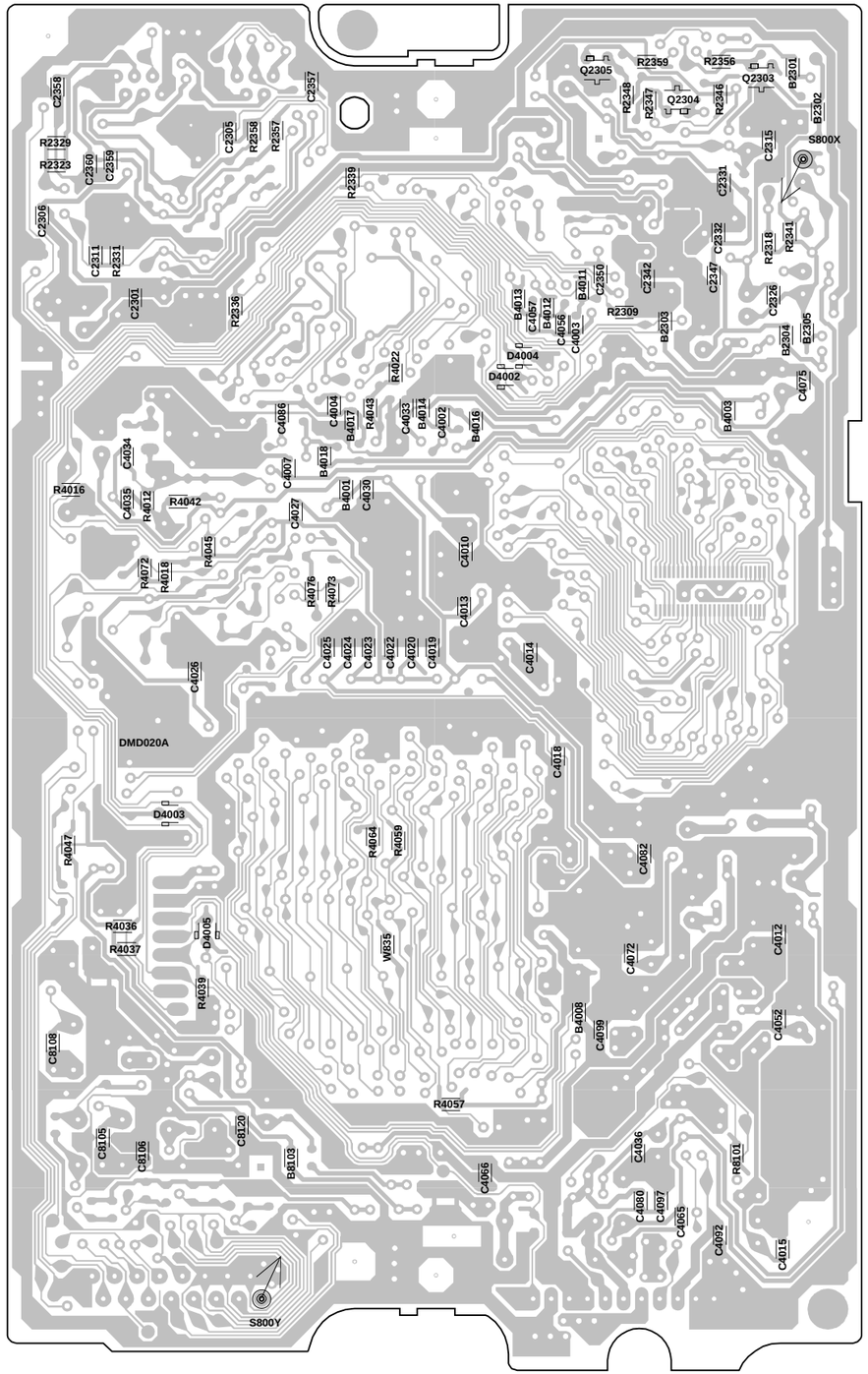

PRINTED CIRCUIT BOARDS
AV/CRT (INSERTED PARTS)
SOLDER SIDE

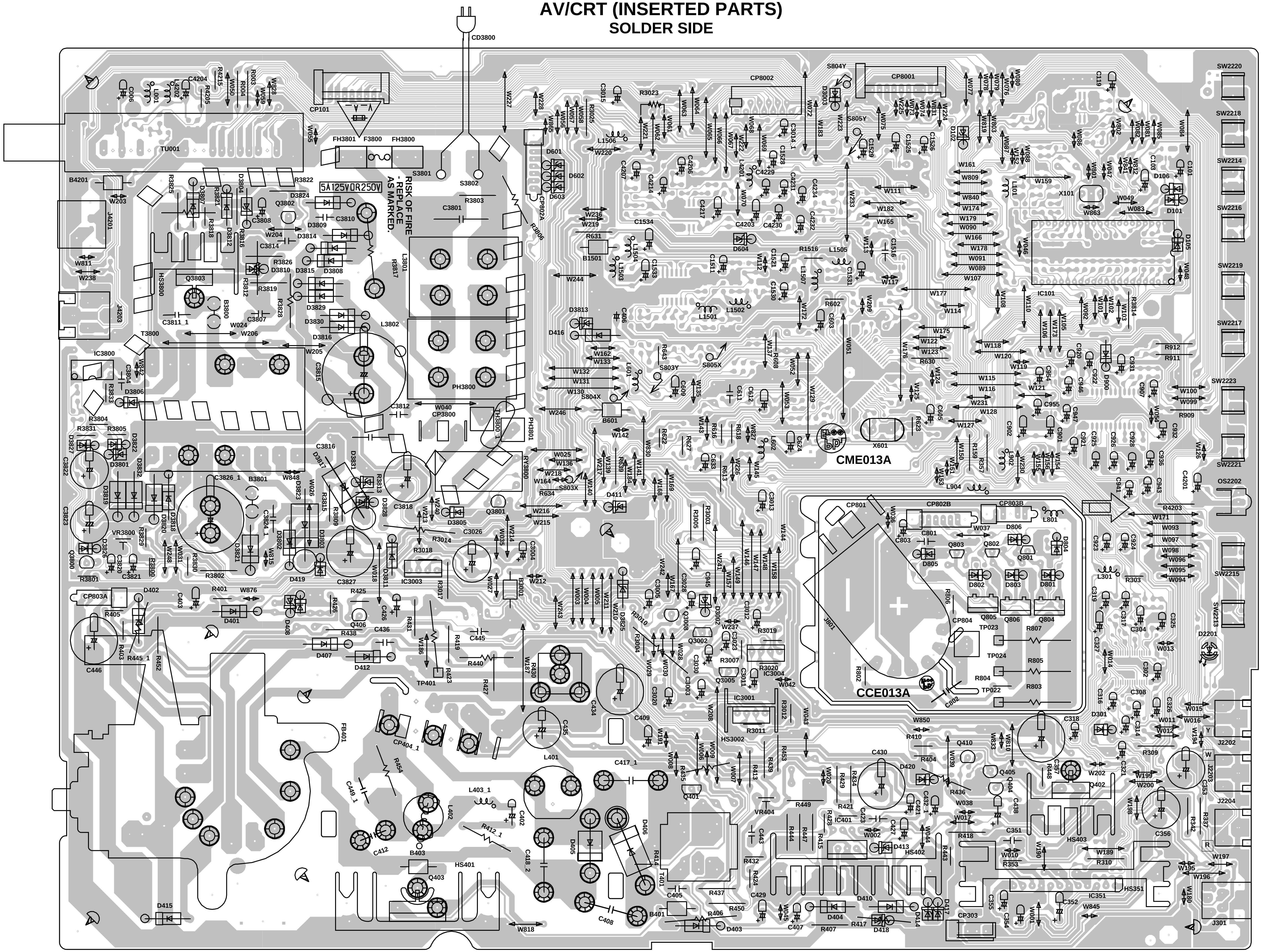

PRINTED CIRCUIT BOARDS
AV/CRT (CHIP MOUNTED PARTS)
SOLDER SIDE

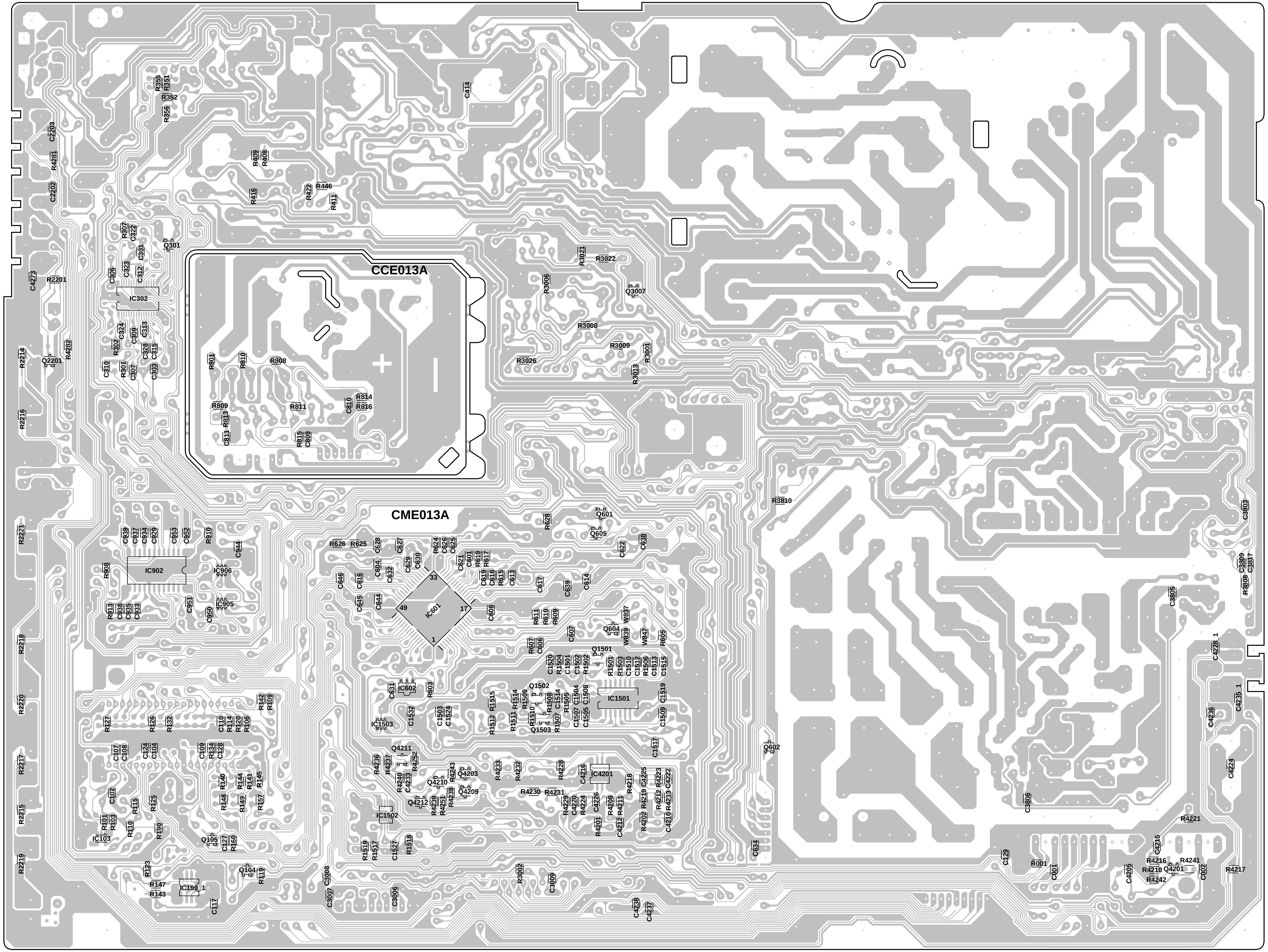

PRINTED CIRCUIT BOARDS

LOADING MOTOR (INSERTED PARTS)
SOLDER SIDE

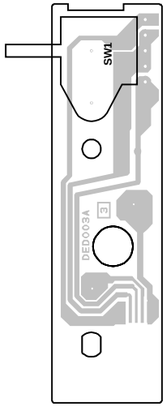

LOADING MOTOR (CHIP MOUNTED PARTS)
SOLDER SIDE

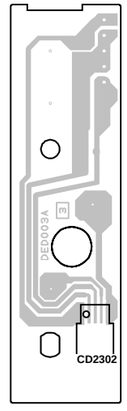

SW
SOLDER SIDE

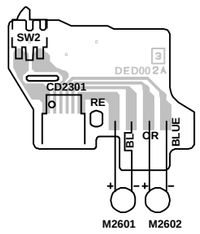

MPEG/MICON/DSP SCHEMATIC DIAGRAM

(DVD PCB)

MPEG/MICON/DSP/RF_AMP

IC4001

ZR36862PQCG

DIGITAL AUDIO SIGNAL(PB)

NOTE:THE DC VOLTAGE EACH PART WAS MEASURED WITH THE DIGITAL TESTER DURING PLAYBACK.

NOTE: THIS SCHEMATIC DIAGRAM IS THE LATEST AT THE TIME OF PRINTING AND SUBJECT TO CHANGE WITHOUT NOTICE 。

FROM/TO MEMORY

FROM/TO AUDIO/VIDEO

FROMTO MOTOR DRIVE

FROM/TO POWER

DVD/VR 130mm
DVD COMBO 250mm
CD4002 (CP8001)
C32B2202

PCB130
DMD020

MEMORY SCHEMATIC DIAGRAM
(DVD PCB)

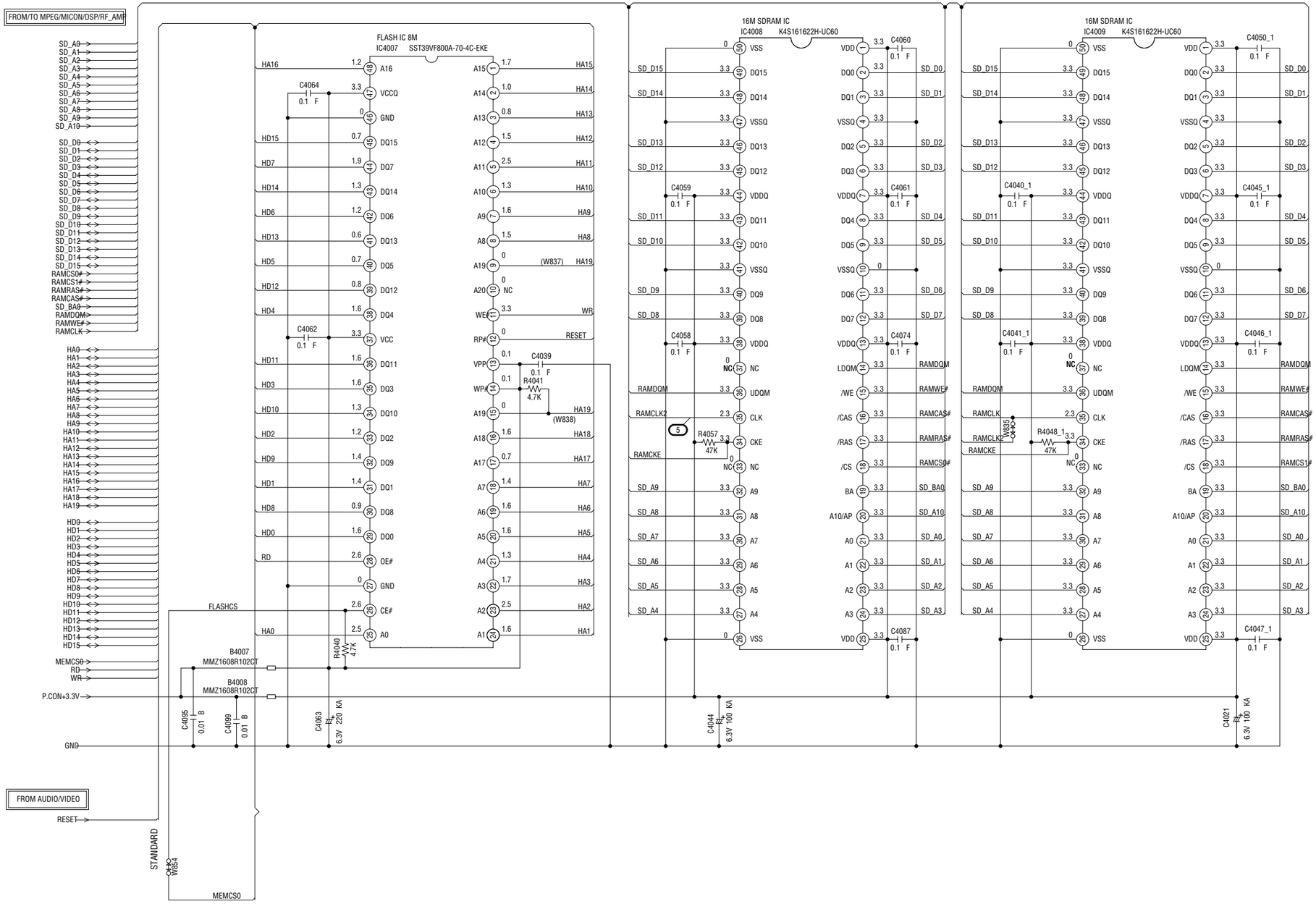

NOTE: THIS SCHEMATIC DIAGRAM IS THE LATEST AT THE TIME OF PRINTING AND SUBJECT TO CHANGE WITHOUT NOTICE。

NOTE: THE DC VOLTAGE EACH PART WAS MEASURED WITH THE DIGITAL TESTER DURING PLAYBACK.

MOTOR DRIVE SCHEMATIC DIAGRAM

(DVD PCB)

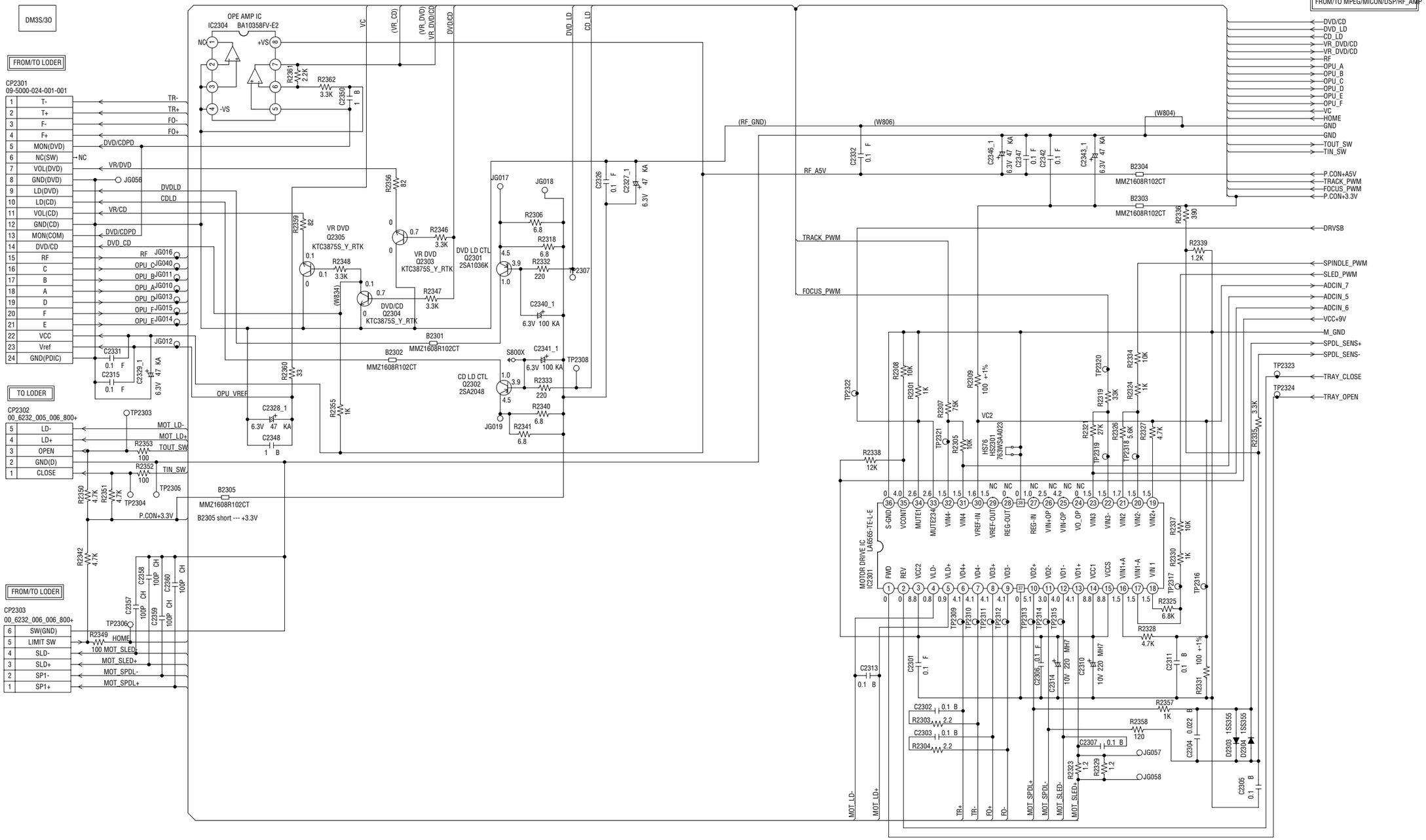

NOTE: THIS SCHEMATIC DIAGRAM IS THE LATEST AT THE TIME OF PRINTING AND SUBJECT TO CHANGE WITHOUT NOTICE 。

NOTE:THE DC VOLTAGE EACH PART WAS MEASURED WITH THE DIGITAL TESTER DURING PLAYBACK.

PCB130
DMD020

AUDIO/VIDEO SCHEMATIC DIAGRAM

(DVD PCB)

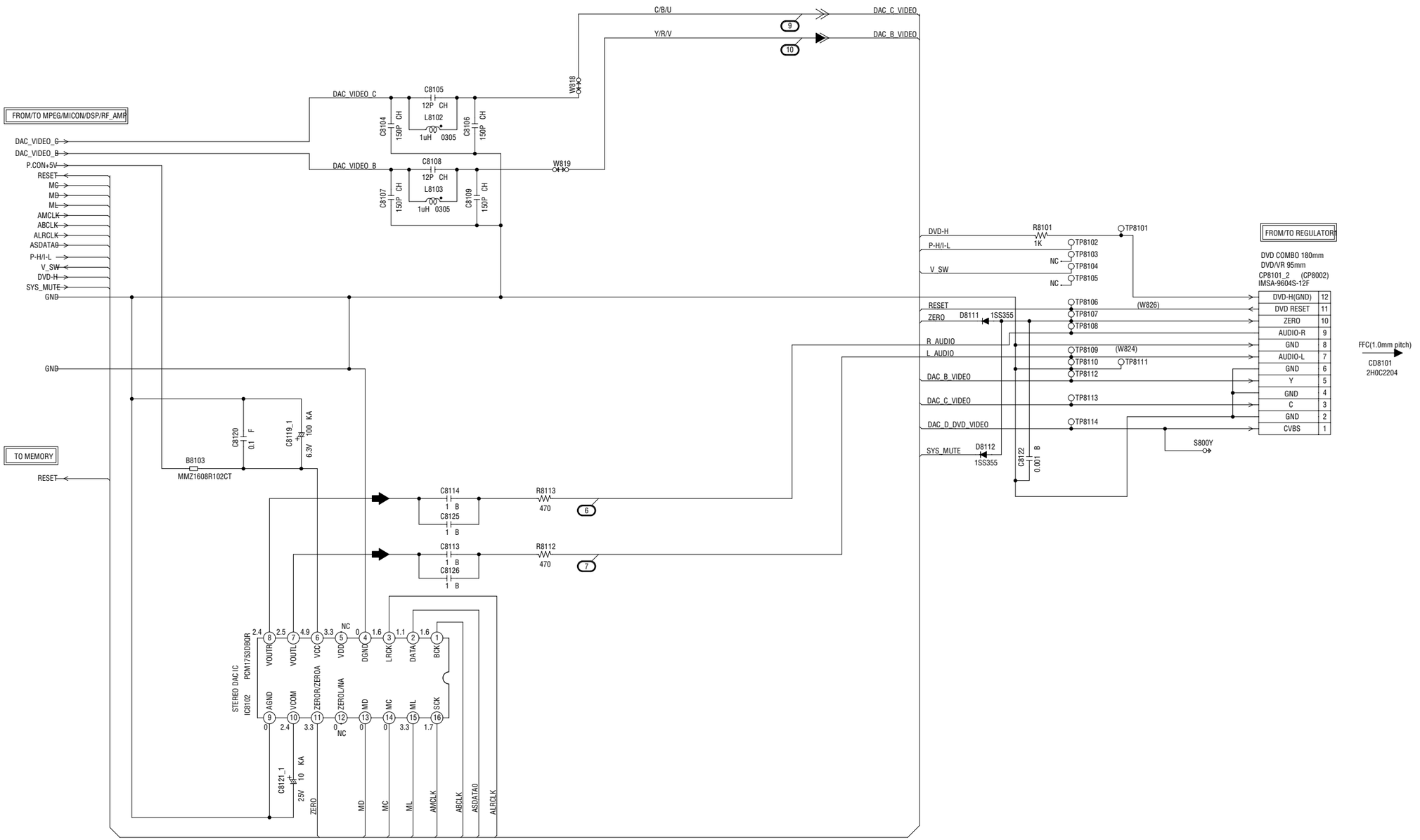

◀ R.SIGNAL+ COMPONENT SIGNAL(U)

≪ B.SIGNAL+ COMPONENT SIGNAL(V)

◀ AUDIO SIGNAL(PB)

NOTE:THE DC VOLTAGE EACH PART WAS MEASURED WITH THE DIGITAL TESTER DURING PLAYBACK.

NOTE: THIS SCHEMATIC DIAGRAM IS THE LATEST AT THE TIME OF PRINTING AND SUBJECT TO CHANGE WITHOUT NOTICE 。

REGULATOR1 SCHEMATIC DIAGRAM

(AV PCB)

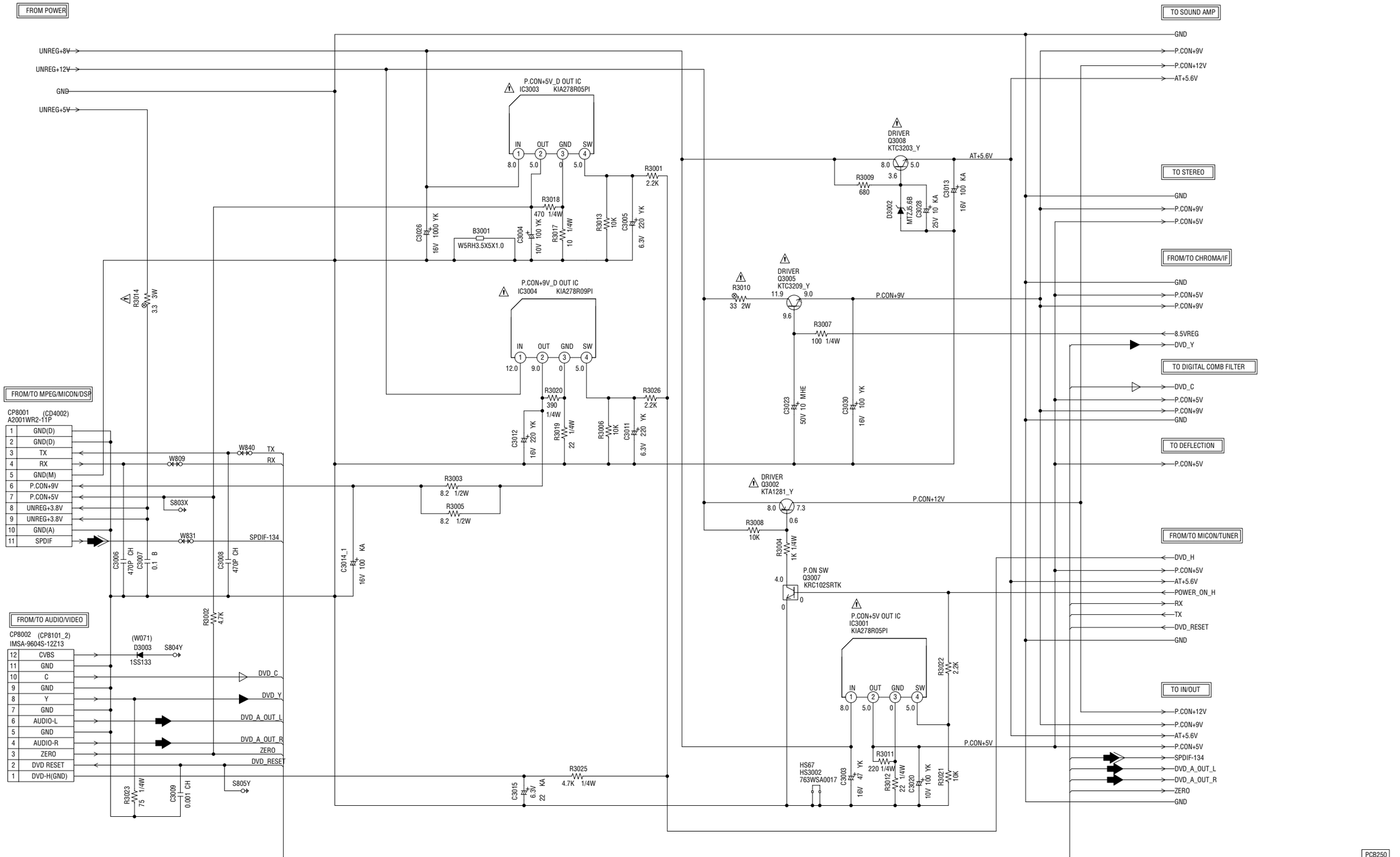

NOTE:THE DC VOLTAGE EACH PART WAS MEASURED WITH THE DIGITAL TESTER DURING PLAYBACK.

NOTE: THIS SCHEMATIC DIAGRAM IS THE LATEST AT THE TIME OF PRINTING AND SUBJECT TO CHANGE WITHOUT NOTICE 。

CAUTION SINCE THESE PARTS MARKED BY ⚠ ARE CRITICAL FOR SAFETY,USE ONES DESCRIBED IN PARTS LIST ONLY 。

ATTENTION: LES PIECES REPAREES PAR UN ⚠ ETANT DANGEREUSES AN POINT DE VUE SECURITE N'UTILISER QUE CELLS DECRITES DANS LA NOMENCLATURE DES PIECES。

CAUTION: DIGITAL TRANSISTOR

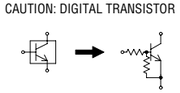

- DIGITAL AUDIO SIGNAL(PB)
- AUDIO SIGNAL(PB)
- PLAYBACK LUMINANCE SIGNAL
- PLAYBACK COLOR SIGNAL

MICON /TUNER SCHEMATIC DIAGRAM

(AV PCB)

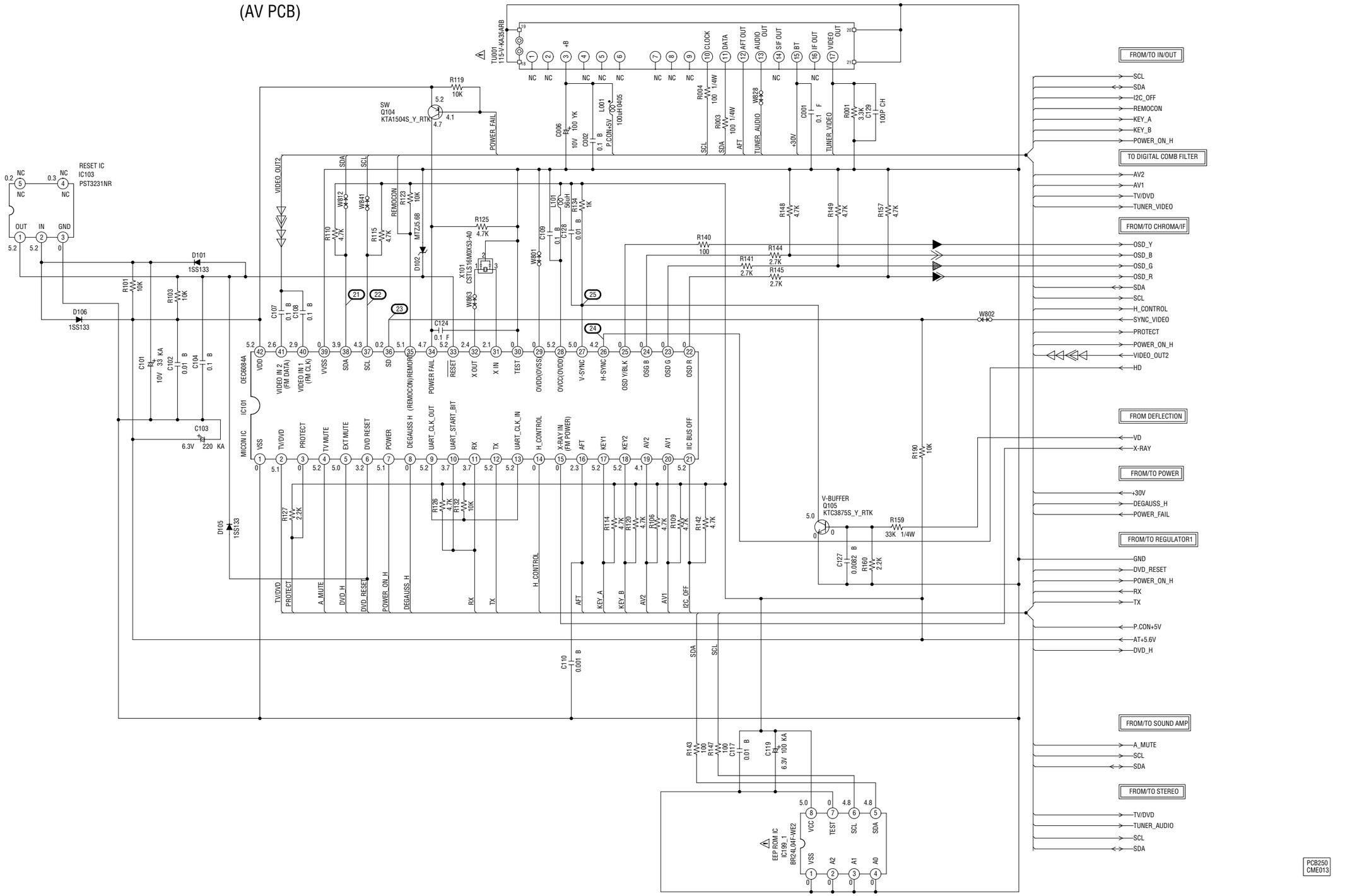

CAUTION SINCE THESE PARTS MARKED BY ⚠ ARE CRITICAL FOR SAFETY,USE ONES DESCRIBED IN PARTS LIST ONLY 。

ATTENTION:LES PIECES REPAREES PAR UN ⚠ ETANT DANGEREUSES AN POINT DE VUE SECURITE N'UTILISER QUE CELLS DECRITES DANS LA NOMENCLATURE DES PIECES。

NOTE:THIS SCHEMATIC DIAGRAM IS THE LATEST AT THE TIME OF PRINTING AND SUBJECT TO CHANGE WITHOUT NOTICE 。

NOTE:THE DC VOLTAGE AT EACH PART WAS MEASURED WITH THE DIGITAL TESTER WHEN THE COLOR BROADCAST WAS RECEIVED IN GOOD CONDITION AND PICTURE IS NORMAL.

≪ B.SIGNAL
◀ G.SIGNAL
◀ R.SIGNAL

◁◁ TUNER VIDEO SIGNAL
◁◁ PLAYBACK VIDEO SIGNAL
◀ PLAYBACK LUMINANCE SIGNAL

CHROMA/IF SCHEMATIC DIAGRAM(AV PCB)

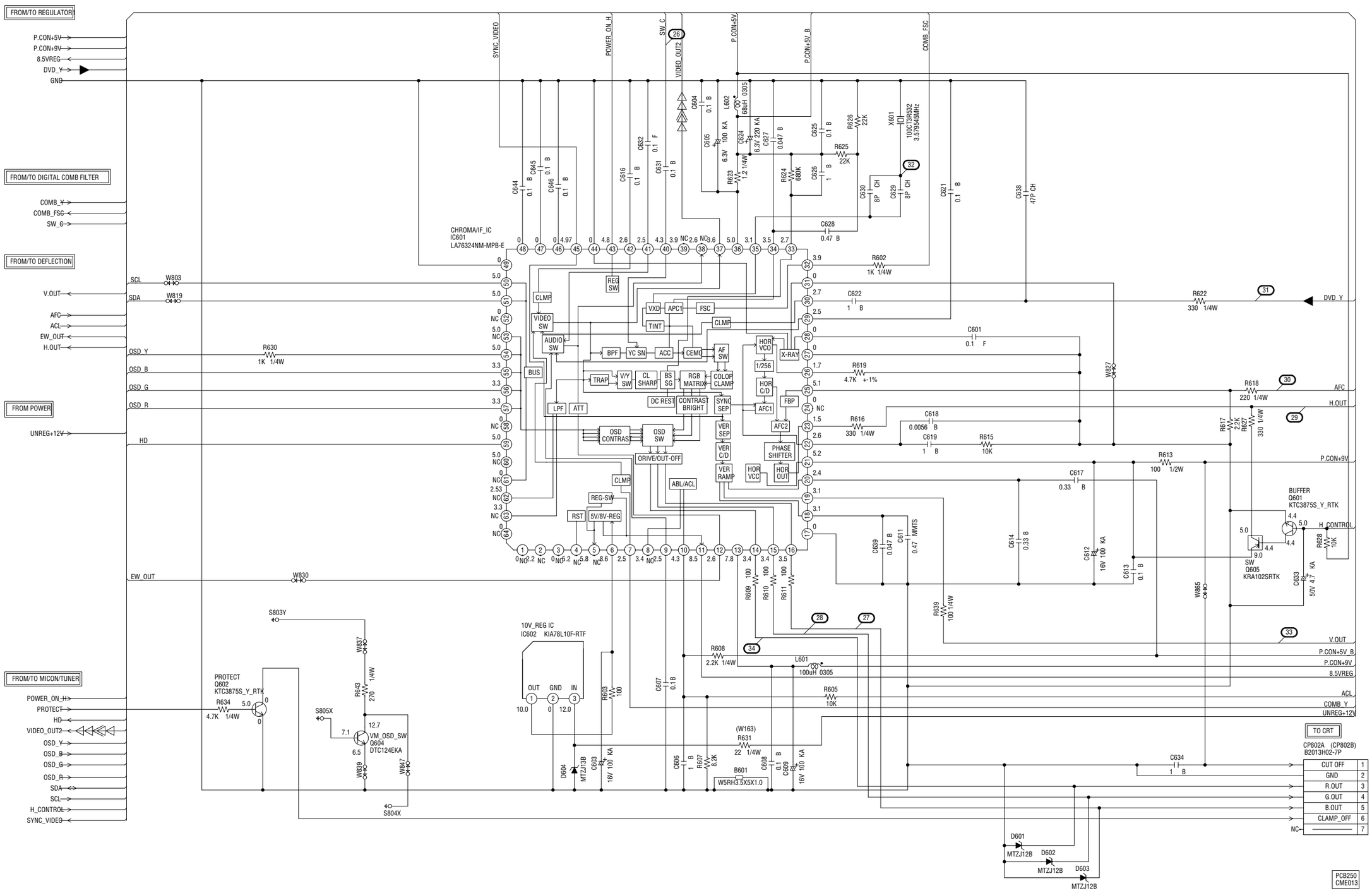

◀ PLAYBACK LUMINANCE SIGNAL
◁◁ TUNER VIDEO SIGNAL
◁◁◁ PLAYBACK VIDEO SIGNAL

CAUTION: DIGITAL TRANSISTOR

NOTE:THE DC VOLTAGE EACH PART WAS MEASURED WITH THE DIGITAL TESTER DURING PLAYBACK.

NOTE:THIS SCHEMATIC DIAGRAM IS THE LATEST AT THE TIME OF PRINTING AND SUBJECT TO CHANGE WITHOUT NOTICE。

NOTE: THE RESISTOR MARKED F IS FUSE RESISTOR.
THE ALUMI ELECTROLYTIC CAPACITOR MARKED NP IS NON POLAR ONE.

DIGITAL COMB FILTER SCHEMATIC DIAGRAM

(AV PCB)

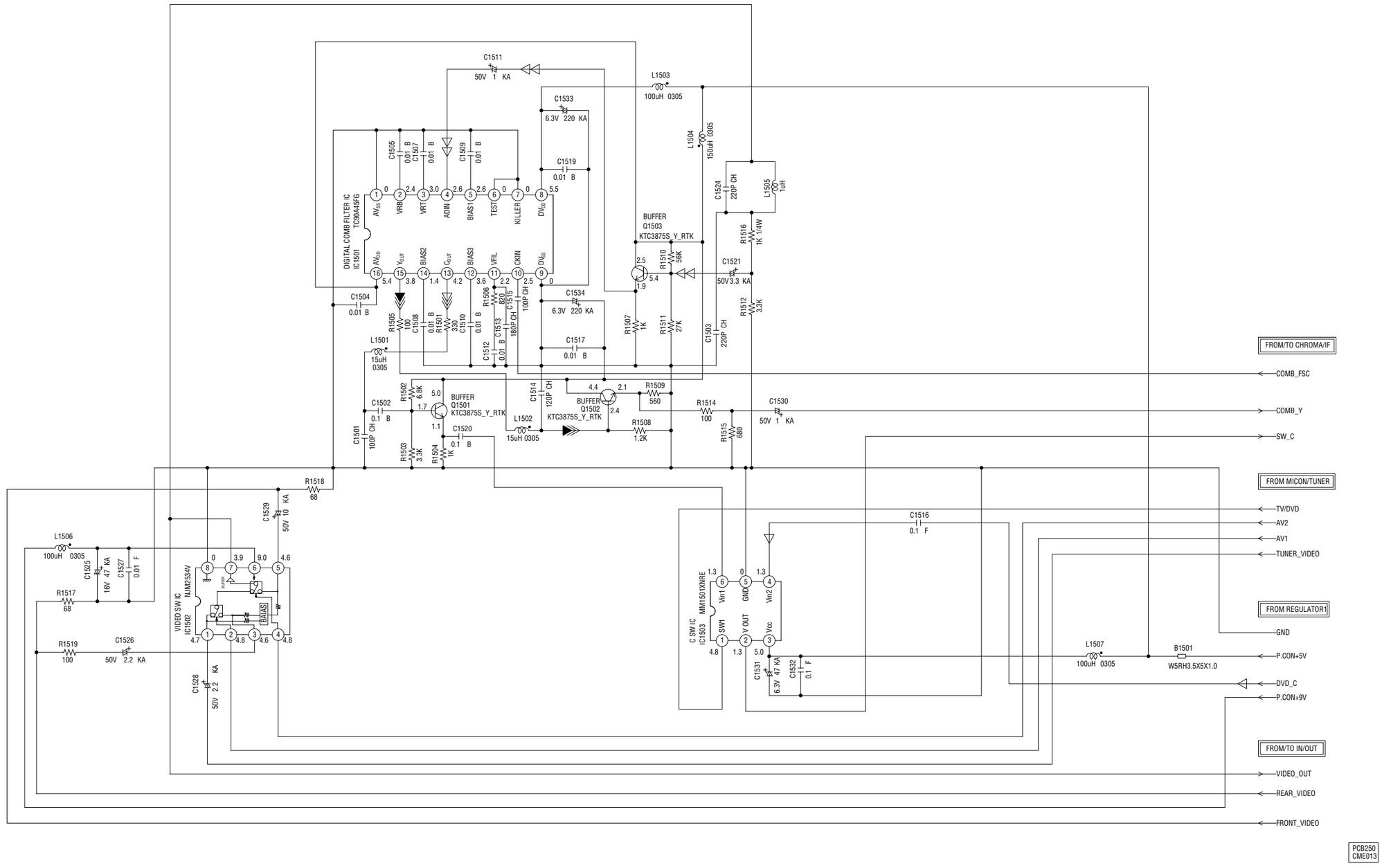

NOTE: THIS SCHEMATIC DIAGRAM IS THE LATEST AT THE TIME OF PRINTING AND SUBJECT TO CHANGE WITHOUT NOTICE。

NOTE: THE DC VOLTAGE EACH PART WAS MEASURED WITH THE DIGITAL TESTER DURING PLAYBACK.

◁ PLAYBACK COLOR SIGNAL
◁◁ TUNER VIDEO SIGNAL

SOUND AMP SCHEMATIC DIAGRAM

(AV PCB)

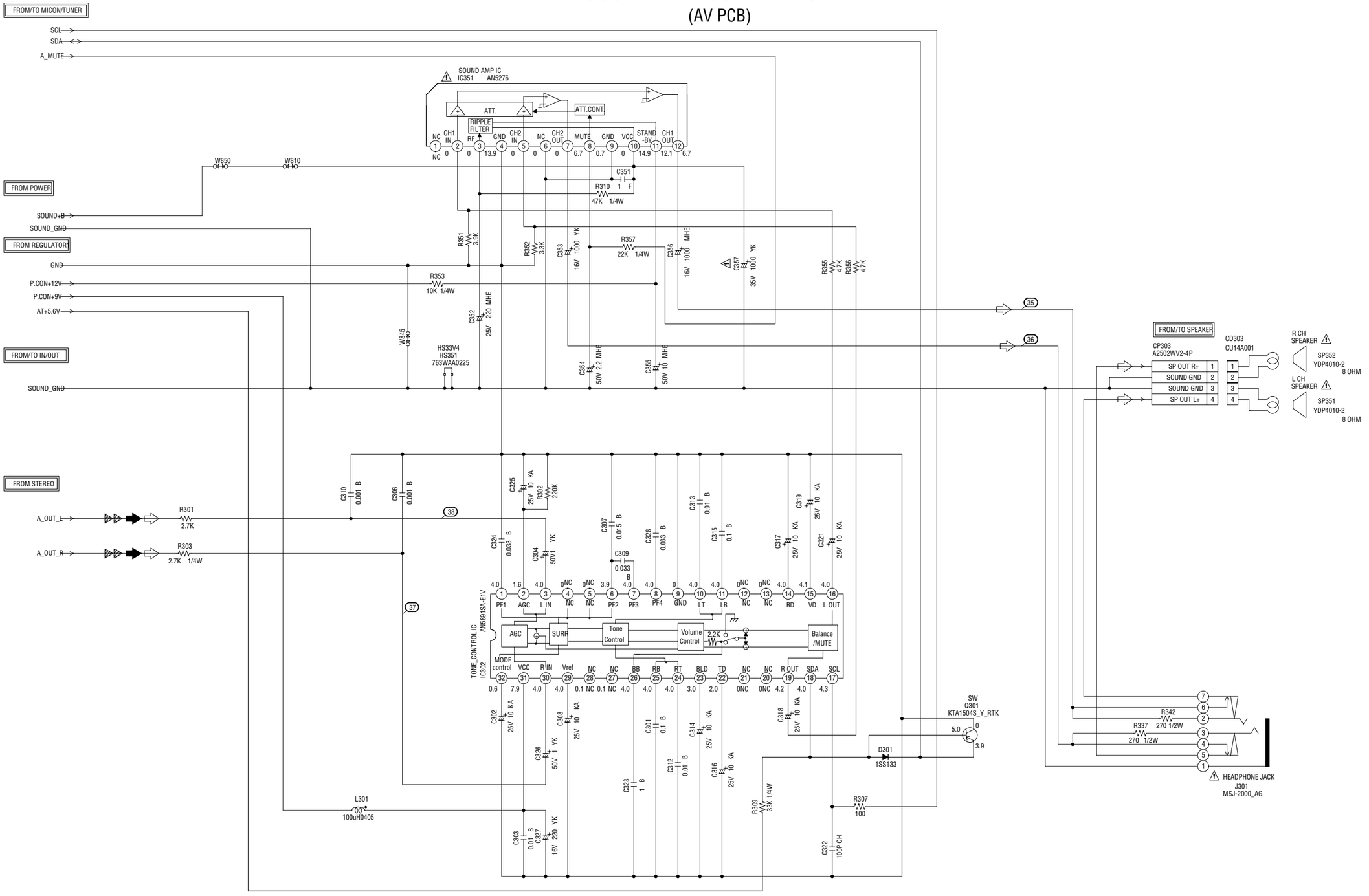

NOTE:THE DC VOLTAGE AT EACH PART WAS MEASURED WITH THE DIGITAL TESTER WHEN THE COLOR BROADCAST WAS RECEIVED IN GOOD CONDITION AND PICTURE IS NORMAL.

NOTE:THIS SCHEMATIC DIAGRAM IS THE LATEST AT THE TIME OF PRINTING AND SUBJECT TO CHANGE WITHOUT NOTICE 。

CAUTION:SINCE THESE PARTS MARKED BY ⚠ ARE CRITICAL FOR SAFETY,USE ONES DESCRIBED IN PARTS LIST ONLY 。

ATTENTION:LES PIECES REPAREES PAR UN ⚠ ETANT DANGEREUSES AN POINT DE VUE SECURITE N'UTILISER QUE CELLS DECRITES DANS LA NOMENCLATURE DES PIECES。

⇦ AUDIO SIGNAL
⬅ AUDIO SIGNAL(PB)
⇚ TUNER AUDIO SIGNAL

IN/OUT SCHEMATIC DIAGRAM

(AV PCB)

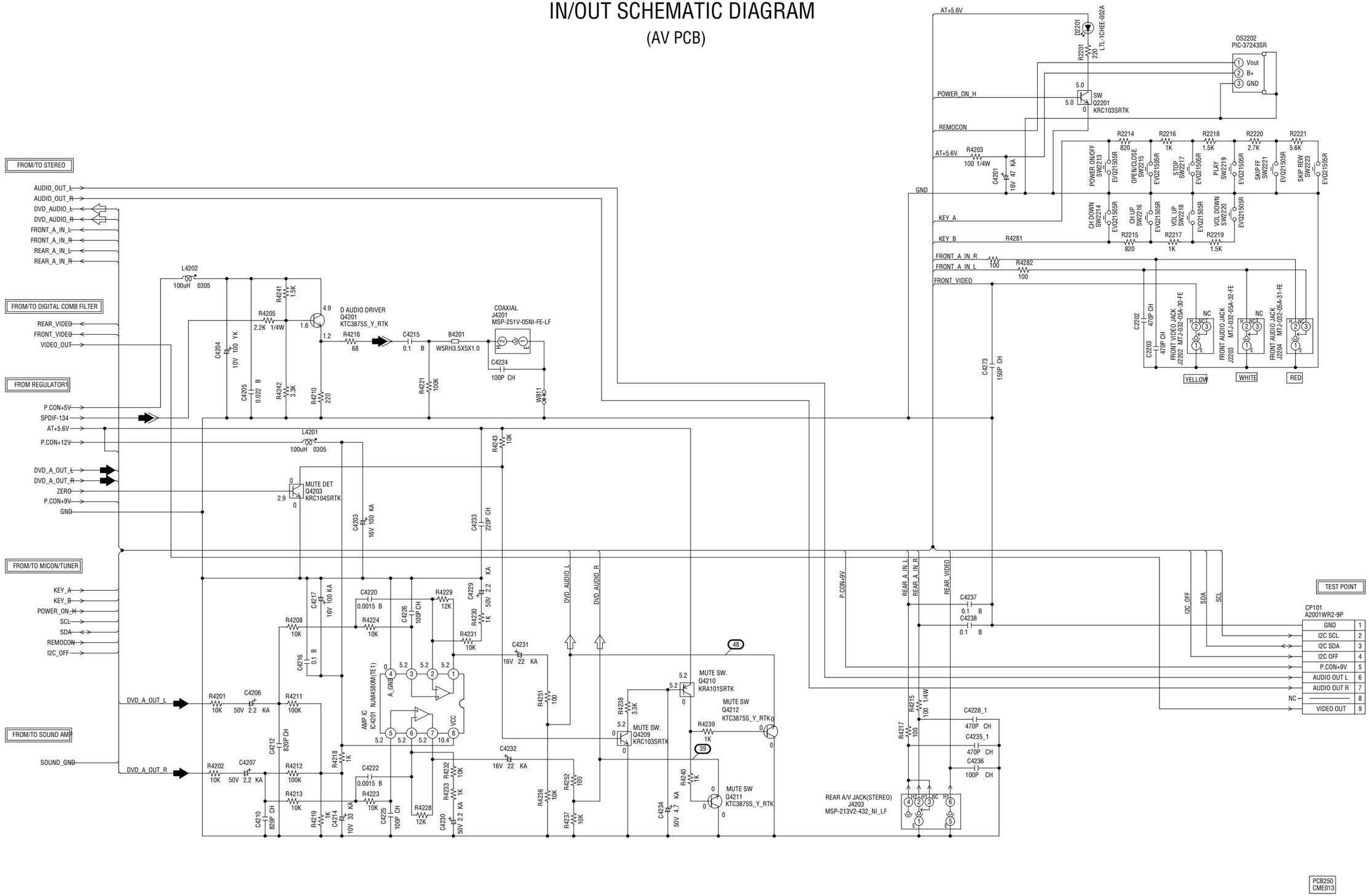

CAUTION: DIGITAL TRANSISTOR

CAUTION: DIGITAL TRANSISTOR

NOTE:THE DC VOLTAGE EACH PART WAS MEASURED WITH THE DIGITAL TESTER DURING PLAYBACK.

NOTE:THIS SCHEMATIC DIAGRAM IS THE LATEST AT THE TIME OF PRINTING AND SUBJECT TO CHANGE WITHOUT NOTICE 。

AUDIO SIGNAL
AUDIO SIGNAL(PB)
DIGITAL AUDIO SIGNAL(PB)

STEREO SCHEMATIC DIAGRAM

(AV PCB)

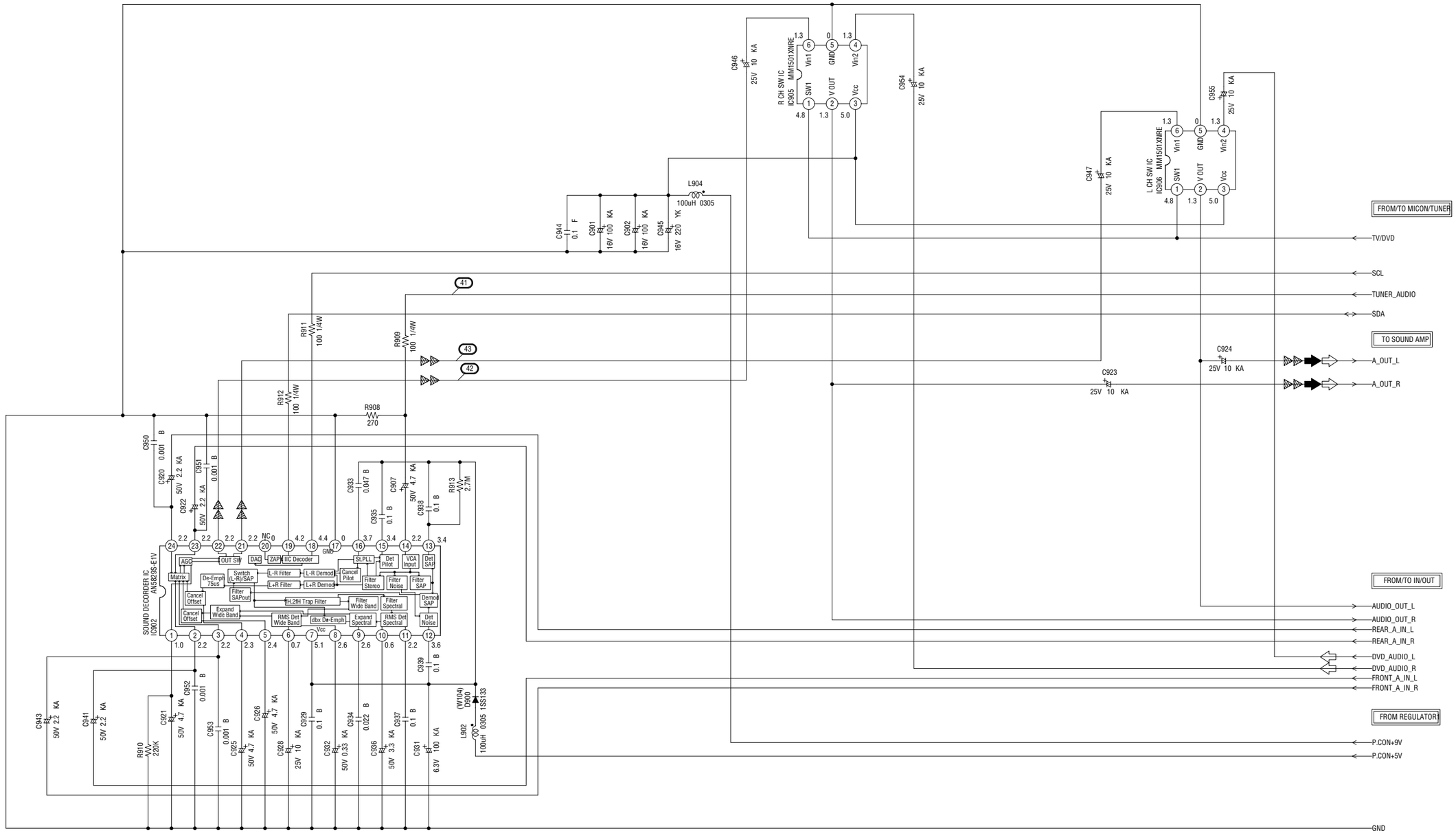

NOTE:THE DC VOLTAGE AT EACH PART WAS MEASURED WITH THE DIGITAL TESTER WHEN THE COLOR BROADCAST WAS RECEIVED IN GOOD CONDITION AND PICTURE IS NORMAL.

NOTE: THIS SCHEMATIC DIAGRAM IS THE LATEST AT THE TIME OF PRINTING AND SUBJECT TO CHANGE WITHOUT NOTICE。

TUNER AUDIO SIGNAL
AUDIO SIGNAL
AUDIO SIGNAL(PB)

DEFLECTION SCHEMATIC DIAGRAM

(AV PCB)

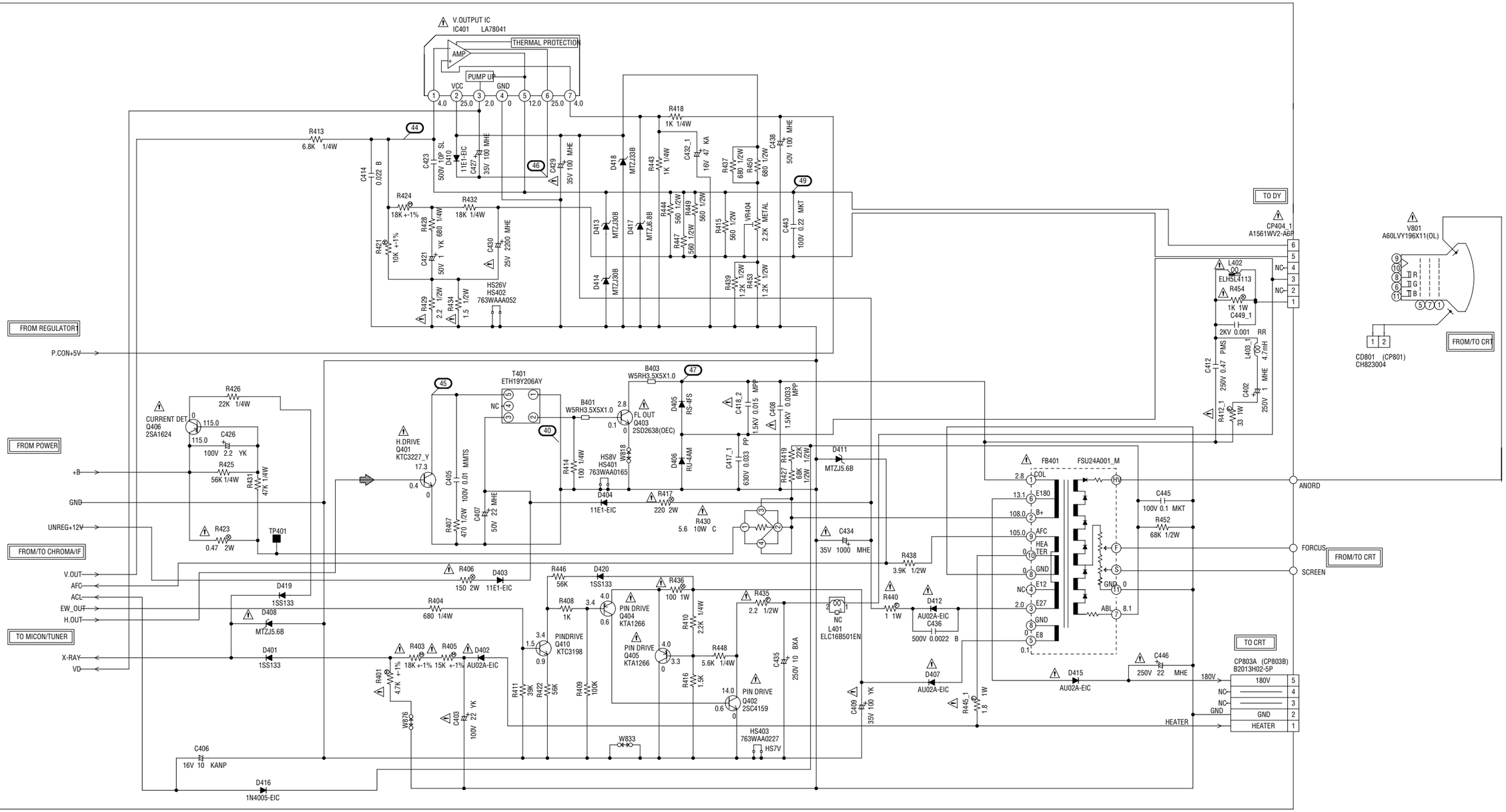

NOTE:THE DC VOLTAGE AT EACH PART WAS MEASURED WITH THE DIGITAL TESTER WHEN THE COLOR BROADCAST WAS RECEIVED IN GOOD CONDITION AND PICTURE IS NORMAL.

NOTE: THIS SCHEMATIC DIAGRAM IS THE LATEST AT THE TIME OF PRINTING AND SUBJECT TO CHANGE WITHOUT NOTICE 。

CAUTION SINCE THESE PARTS MARKED BY ⚠ ARE CRITICAL FOR SAFETY,USE ONES DESCRIBED IN PARTS LIST ONLY 。

ATTENTION:LES PIECES REPAREES PAR UN ⚠ ETANT DANGEREUSES AN POINT DE VUE SECURITE N'UTILISER QUE CELLS DECRITES DANS LA NOMENCLATURE DES PIECES。

DEFLECTION SIGNAL

CRT SCHEMATIC DIAGRAM

(CRT PCB)

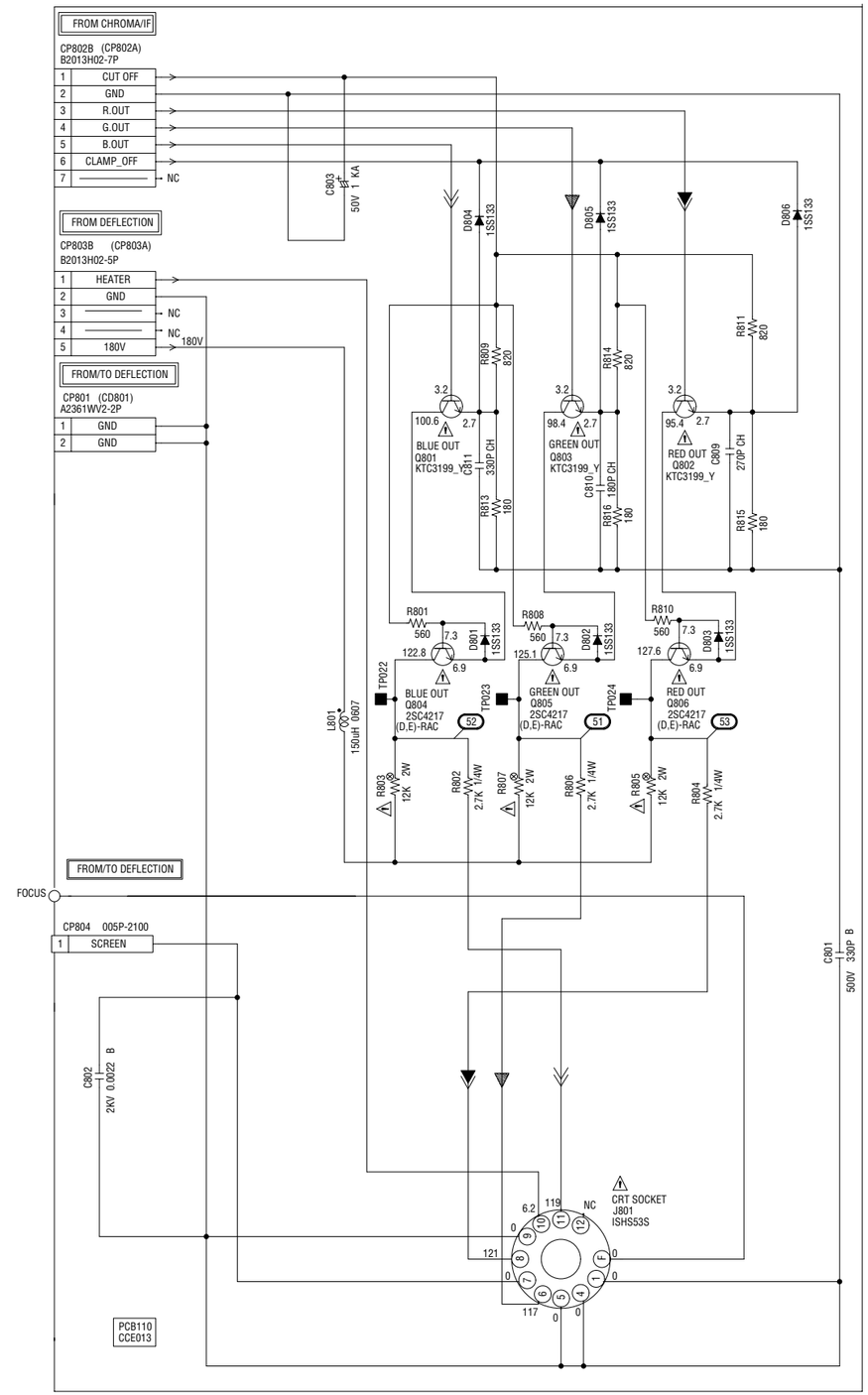

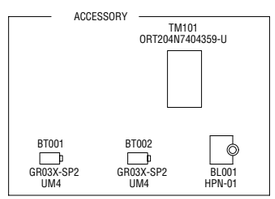

NOTE: THE DC VOLTAGE AT EACH PART WAS MEASURED WITH THE DIGITAL TESTER WHEN THE COLOR BROADCAST WAS RECEIVED IN GOOD CONDITION AND PICTURE IS NORMAL.

NOTE: THIS SCHEMATIC DIAGRAM IS THE LATEST AT THE TIME OF PRINTING AND SUBJECT TO CHANGE WITHOUT NOTICE 。

CAUTION SINCE THESE PARTS MARKED BY ⚠ ARE CRITICAL FOR SAFETY,USE ONES DESCRIBED IN PARTS LIST ONLY 。

ATTENTION: LES PIECES REPAREES PAR UN ⚠ ETANT DANGEREUSES AN POINT DE VUE SECURITE N'UTILISER QUE CELLS DECRITES DANS LA NOMENCLATURE DES PIECES。

◀ R.SIGNAL
◀ G.SIGNAL
≪ B.SIGNAL

POWER SCHEMATIC DIAGRAM

(AV PCB)

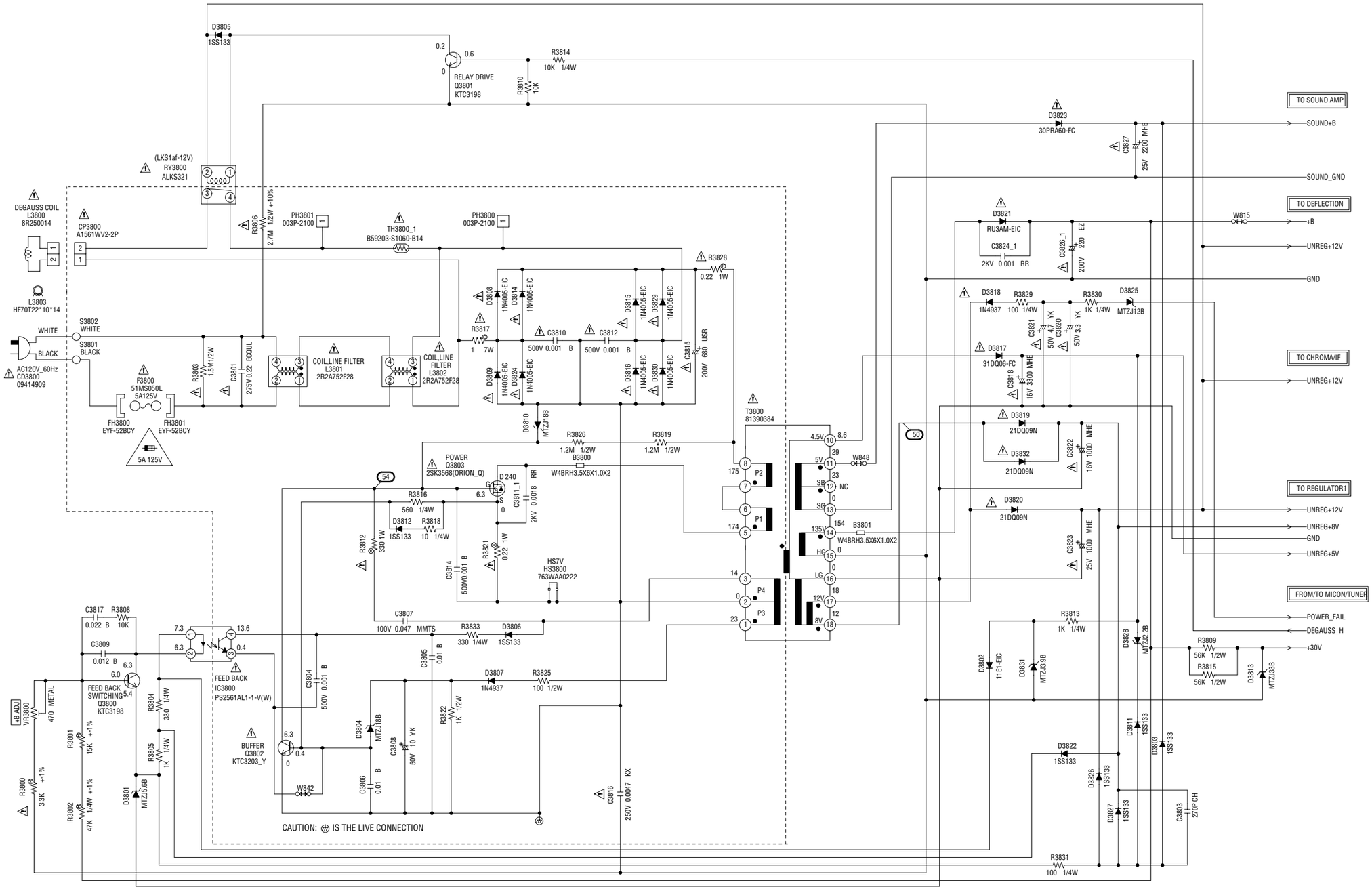

ATTENTION :POUR UNE PROTECTION CONTINUE LES RISQUES D'INCEIE N'UTILISER QUE DES FUSIBLE DE MEME TYPE 5A 125V(F3800).

CAUTION :FOR CONTINUED PROTECTION AGAINST FIRE HAZARD, REPLACE ONLY WITH THE SAME TYPE FUSE 5A 125V(F3800).

NOTE:THE DC VOLTAGE AT EACH PART WAS MEASURED WITH THE DIGITAL TESTER WHEN THE COLOR BROADCAST WAS RECEIVED IN GOOD CONDITION AND PICTURE IS NORMAL.

NOTE:THIS SCHEMATIC DIAGRAM IS THE LATEST AT THE TIME OF PRINTING AND SUBJECT TO CHANGE WITHOUT NOTICE。

CAUTION SINCE THESE PARTS MARKED BY ⚠ ARE CRITICAL FOR SAFETY,USE ONES DESCRIBED IN PARTS LIST ONLY 。

ATTENTION:LES PIECES REPAREES PAR UN ⚠ ETANT DANGEREUSES AN POINT DE VUE SECURITE N'UTILISER QUE CELLS DECRITES DANS LA NOMENCLATURE DES PIECES。

LOADING MOTOR/SW SCHEMATIC DIAGRAM

(SW PCB)

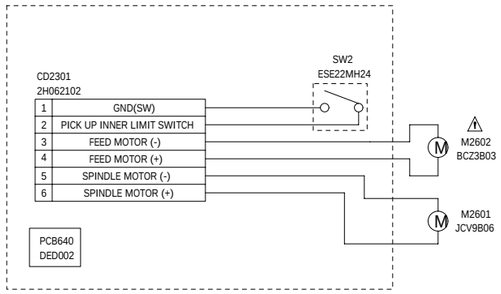

(LOADING MOTOR PCB)

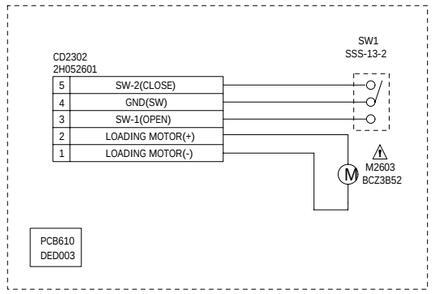

NOTE: THIS SCHEMATIC DIAGRAM IS THE LATEST AT THE TIME OF PRINTING AND SUBJECT TO CHANGE WITHOUT NOTICE.

INTERCONNECTION DIAGRAM

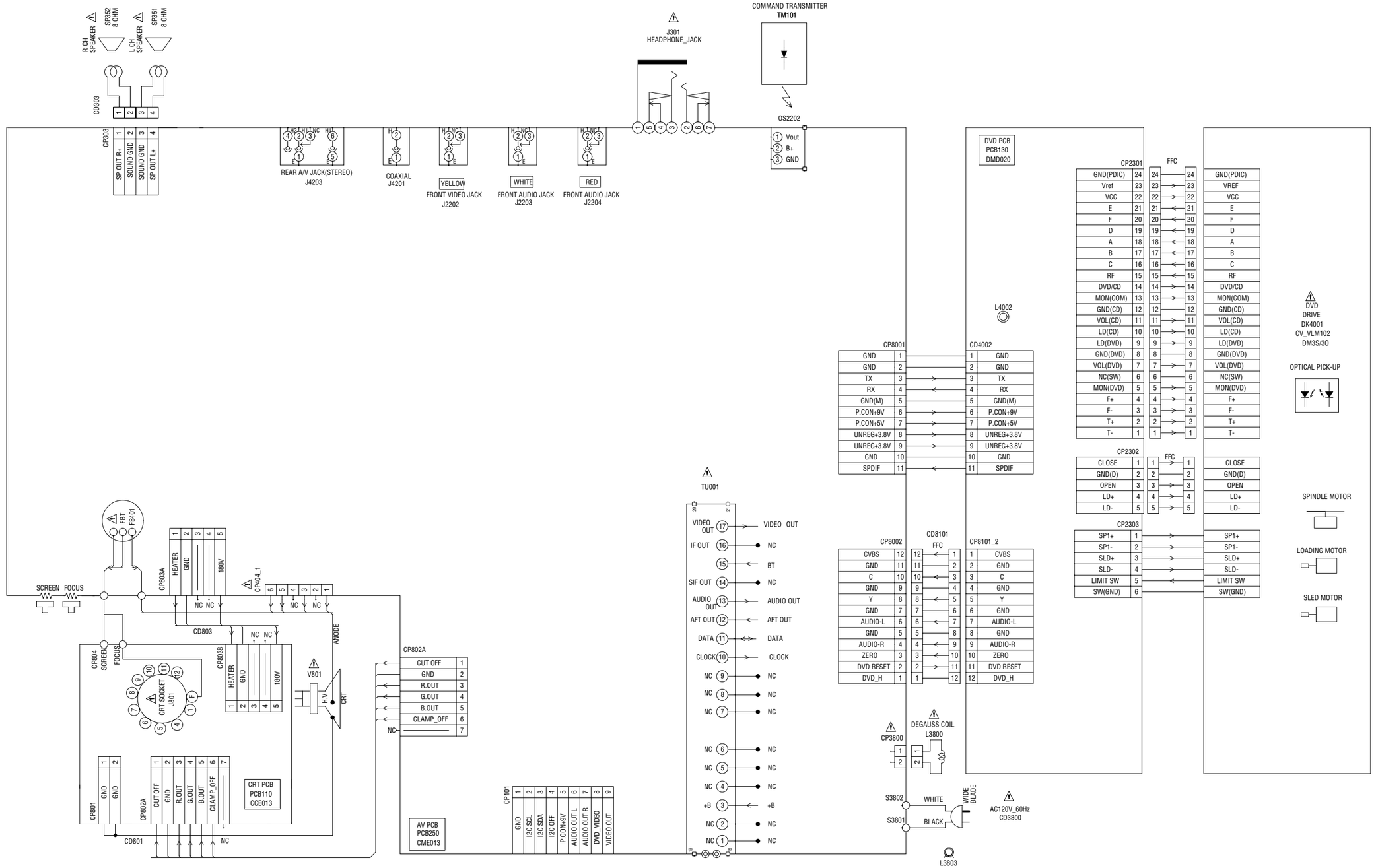

NOTE: THIS INTERCONNECTION DIAGRAM IS THE LATEST AT THE TIME OF PRINTING AND SUBJECT TO CHANGE WITHOUT NOTICE 。

ATTENTION: LES PIECES REPAREES PAR UN ⚠ ETANT DANGEREUSES AN POINT DE VUE SECURITE N'UTILISER QUE CELLS DECRITES DANS LA NOMENCLATURE DES PIECES。

CAUTION SINCE THESE PARTS MARKED BY ⚠ ARE CRITICAL FOR SAFETY, USE ONES DESCRIBED IN PARTS LIST ONLY 。

WAVEFORMS

MPEG/MICON/DSP

10ns
100mV

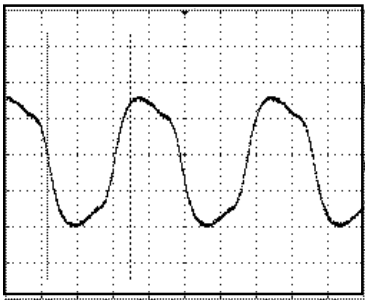

1

5ns
20mV

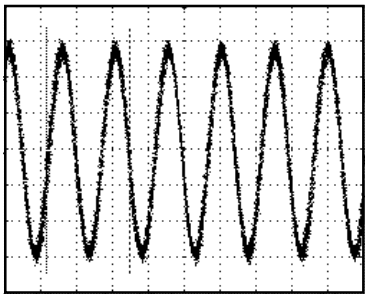

2

20ns
1.0V

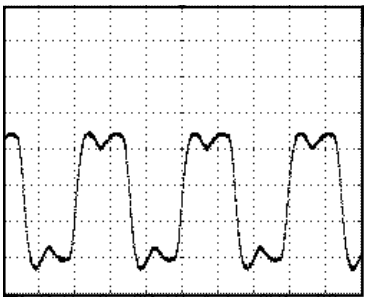

3

200ns
1.0V

4

AUDIO/VIDEO

500µs
1.0V

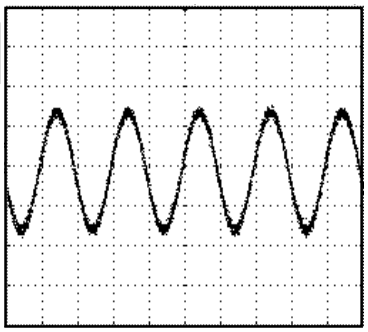

6

500µs
1.0V

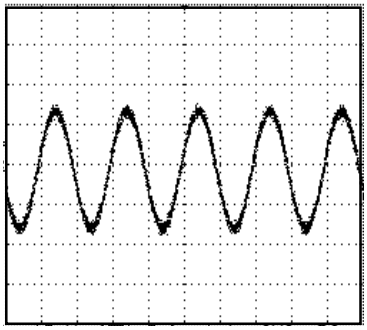

7

10µs
200mV

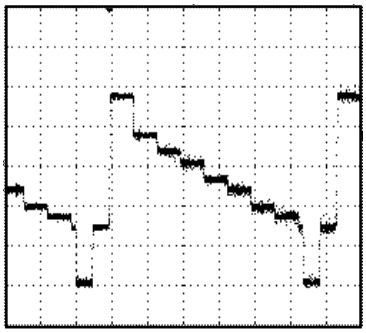

10

10µs
100mV

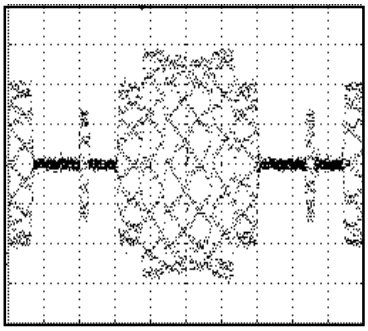

9

POWER ON
0.2ms
1.0V

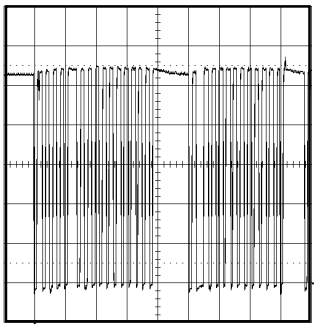

22

POWER ON
0.2ms
1.0V

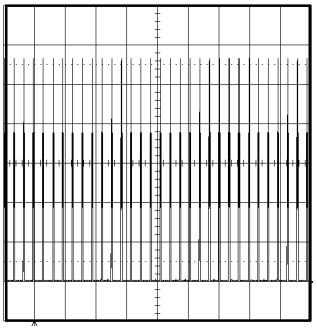

23

POWER ON
5ms
1.0V

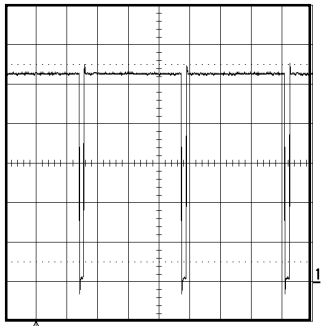

24

POWER ON
50µs
1.0V

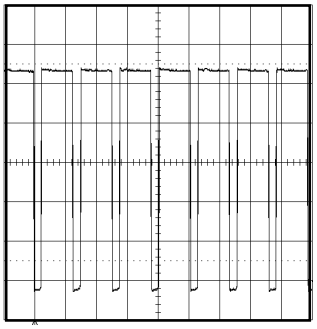

25

MEMORY

200µs
500mV

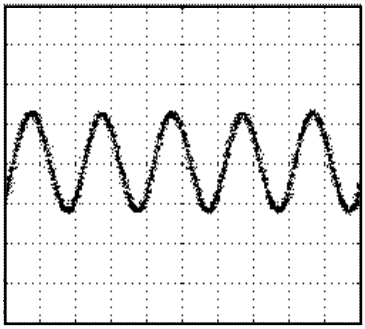

5

MICON/TUNER

POWER ON
0.2ms
1.0V

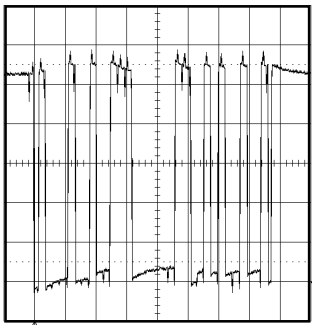

21

CHROMA/IF

POWER ON
20µs
0.5V

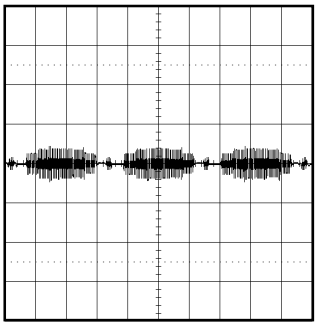

26

NOTE: The following waveforms were measured at the point of the corresponding balloon number in the schematic diagram.

WAVEFORMS

POWER ON
20µs
1.0V

27

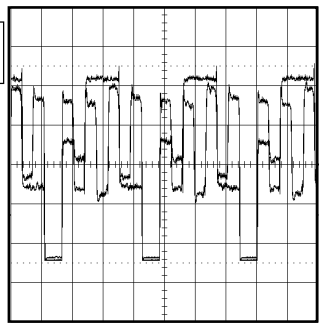

POWER ON
20µs
1.0V

28

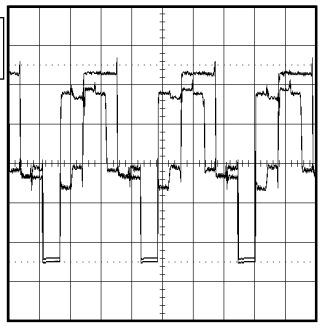

POWER ON
50µs
0.5V

29

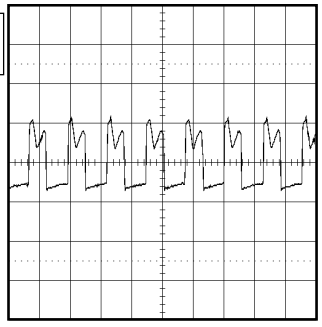

POWER ON
50µs
2.0V

30

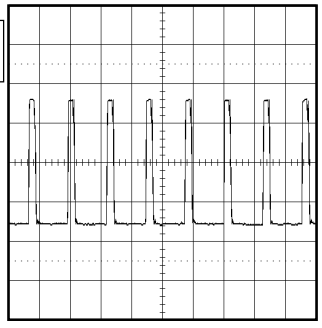

POWER ON
20µs
0.5V

31

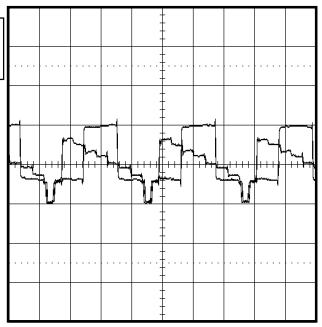

POWER ON
0.5µs
100mV

32

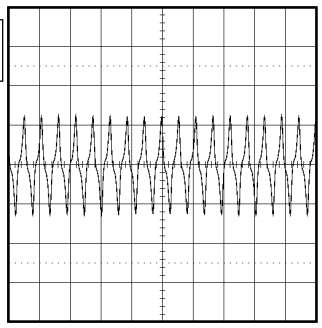

POWER ON
10ms
1.0V

33

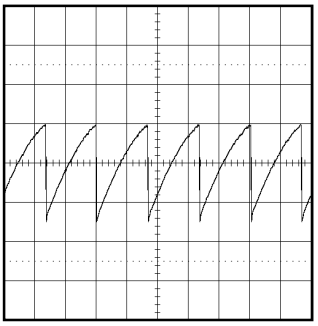

POWER ON
20µs
1.0V

34

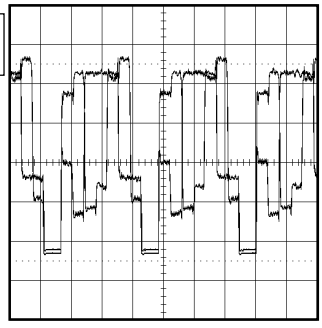

SOUND AMP

POWER ON
1ms
100mV

35

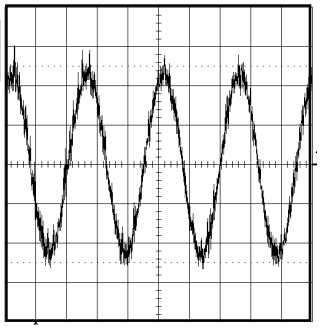

POWER ON
1ms
100mV

36

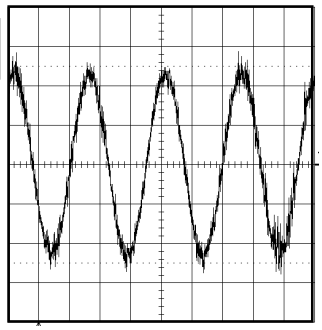

POWER ON
1ms
100mV

37

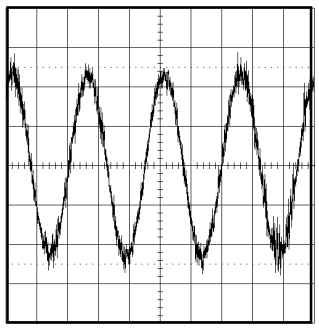

POWER ON
1ms
100mV

38

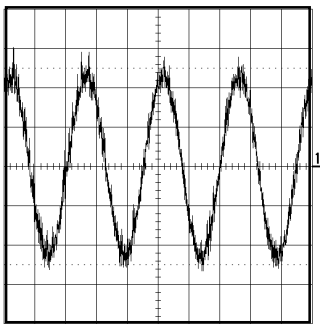

IN/OUT

DVD PLAY
0.5ms
200mV

39

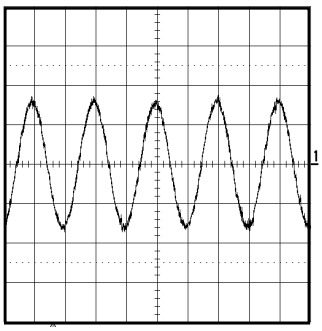

DEFLECTION

POWER ON
50µs
5.0V

40

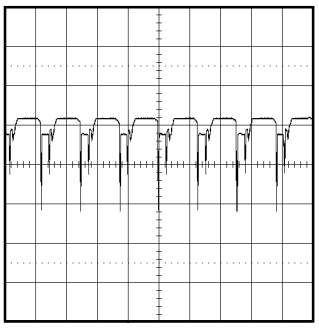

STEREO

POWER ON
1ms
50mV

41

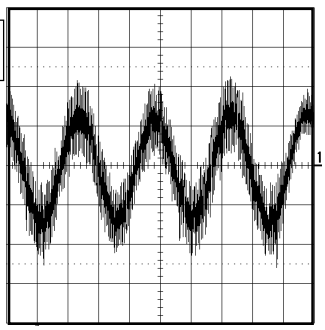

NOTE: The following waveforms were measured at the point of the corresponding balloon number in the schematic diagram.

WAVEFORMS

POWER ON
1ms
200mV

42

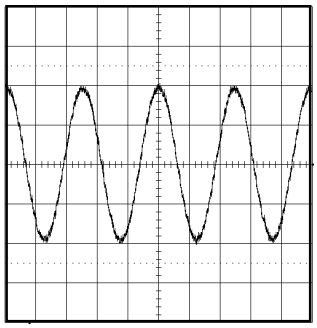

POWER ON
1ms
200mV

43

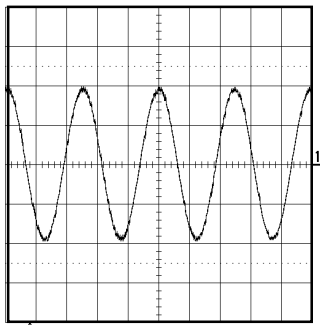

DEFLECTION

POWER ON
10ms
0.5V

44

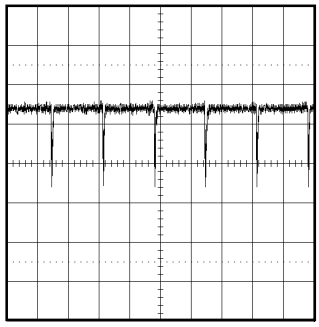

POWER ON
20µs
5.0V

45

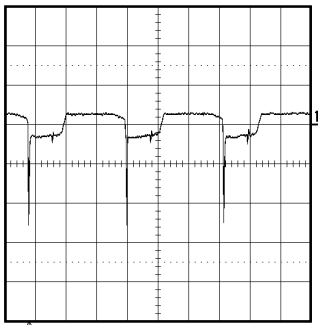

POWER ON
10ms
10V

46

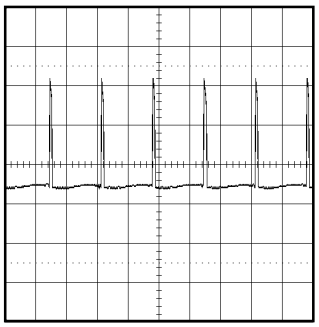

POWER ON
20µs
200V

47

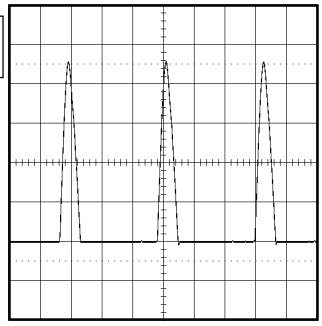

IN/OUT

DVD PLAY
0.5ms
200mV

48

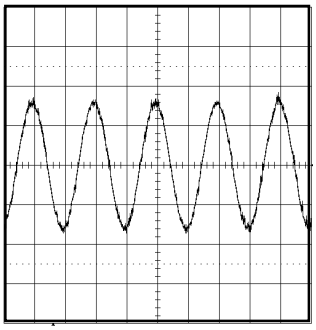

DEFLECTION

POWER ON
5ms
10.0V

49

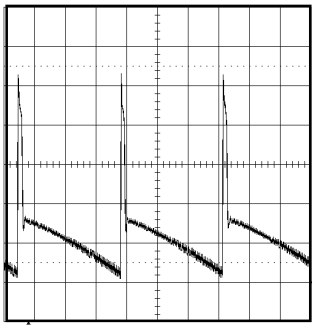

POWER

STANDBY
5µs
5.0V

50

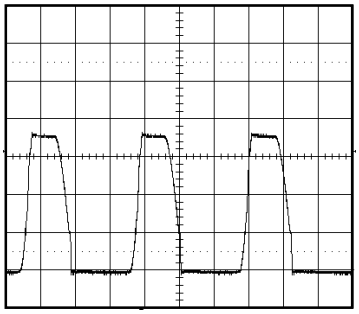

CRT

POWER ON
20µs
50V

51

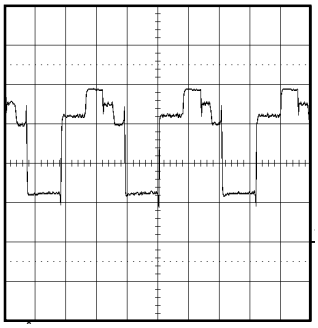

POWER ON
20µs
50V

52

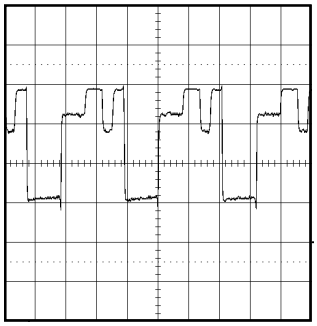

POWER ON
20µs
50V

53

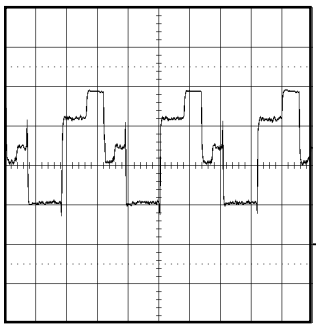

POWER

STANDBY
5µs
5.0V

54

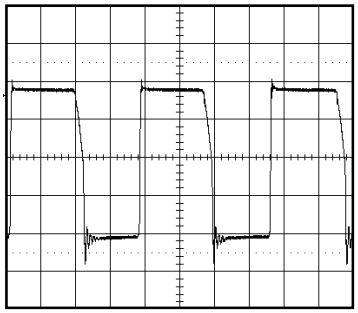

NOTE: The following waveforms were measured at the point of the corresponding balloon number in the schematic diagram.

MECHANICAL EXPLODED VIEW

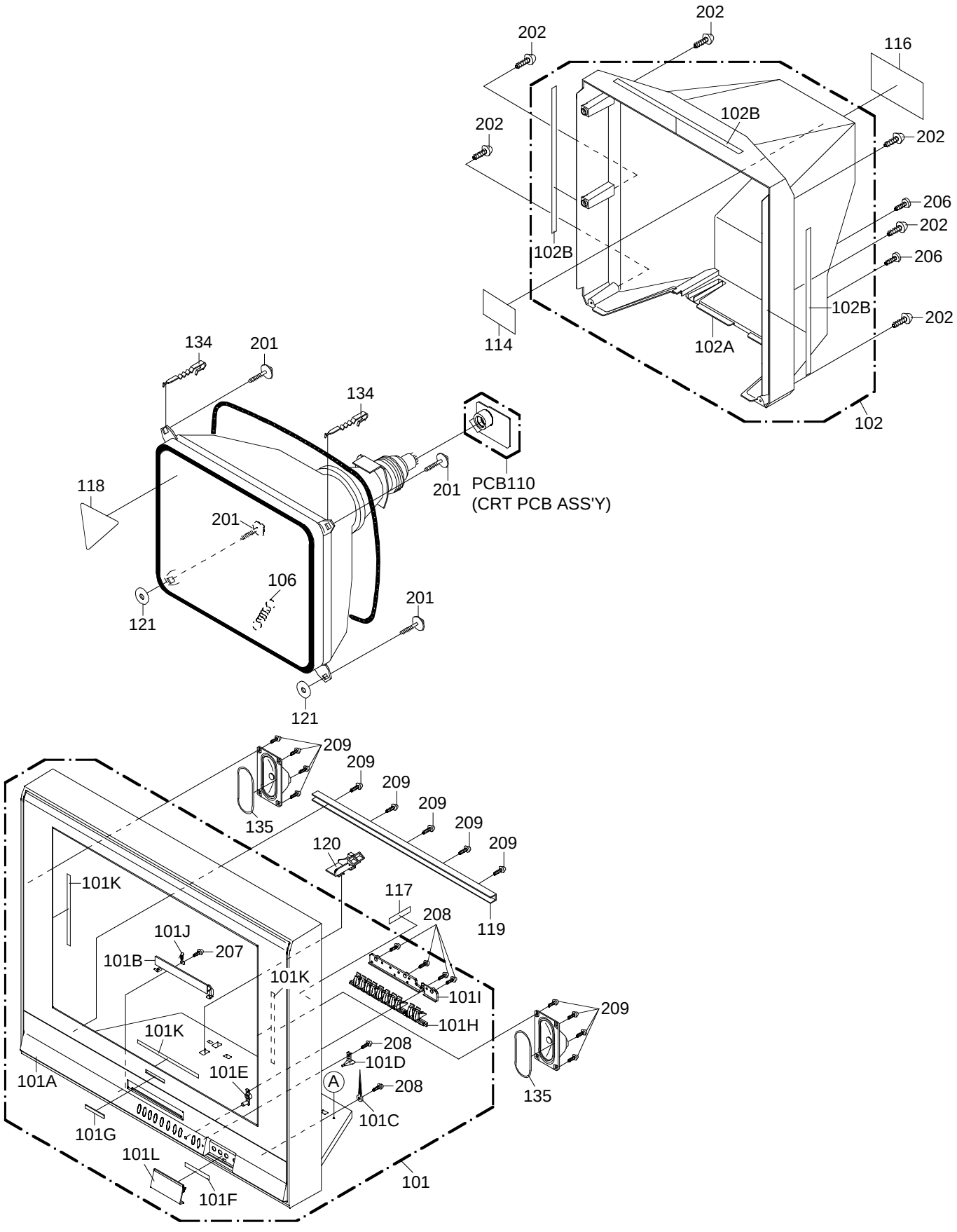

MECHANICAL EXPLODED VIEW

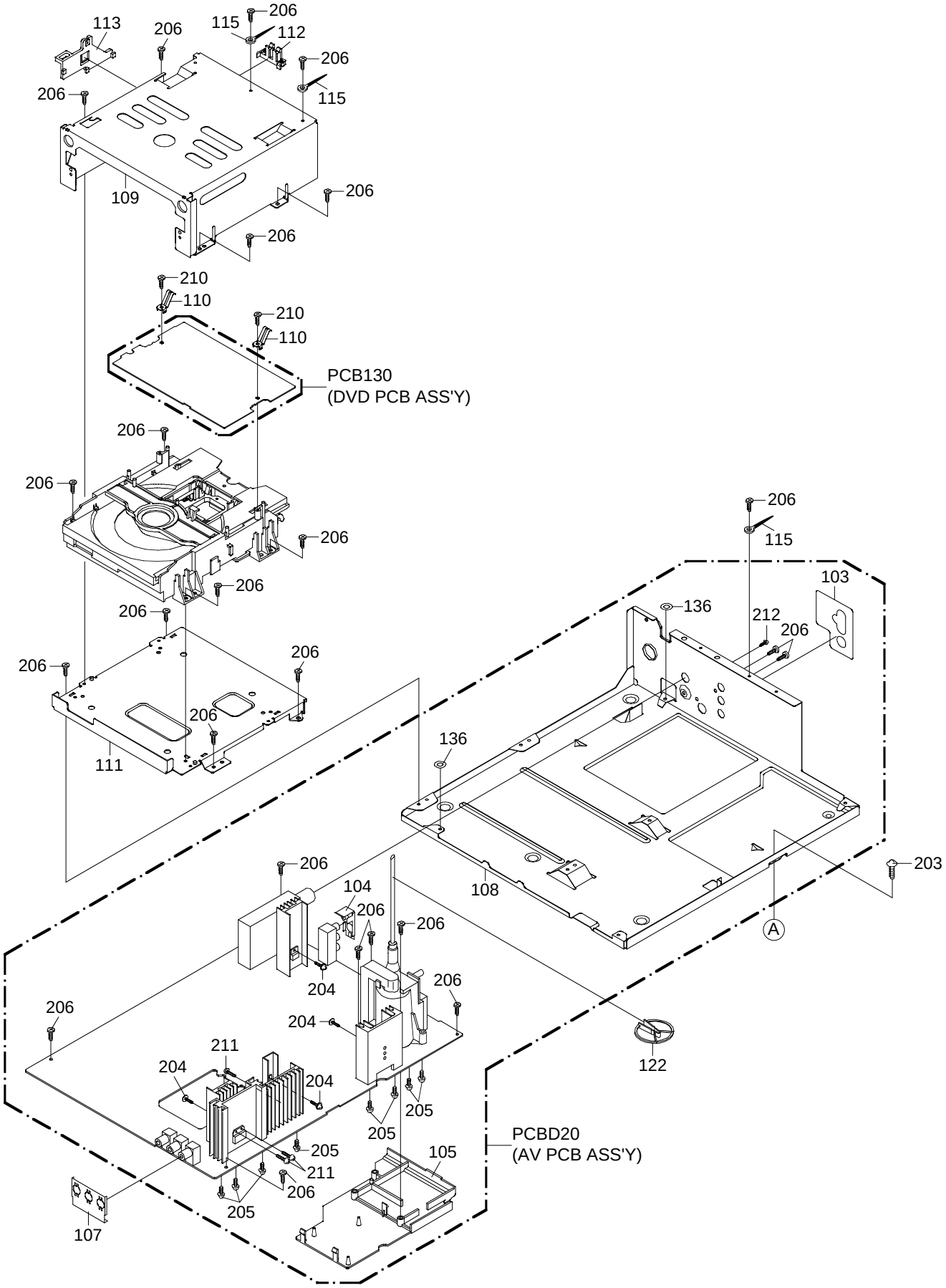

MECHANICAL EXPLODED VIEW
(PACKING DIAGRAM)

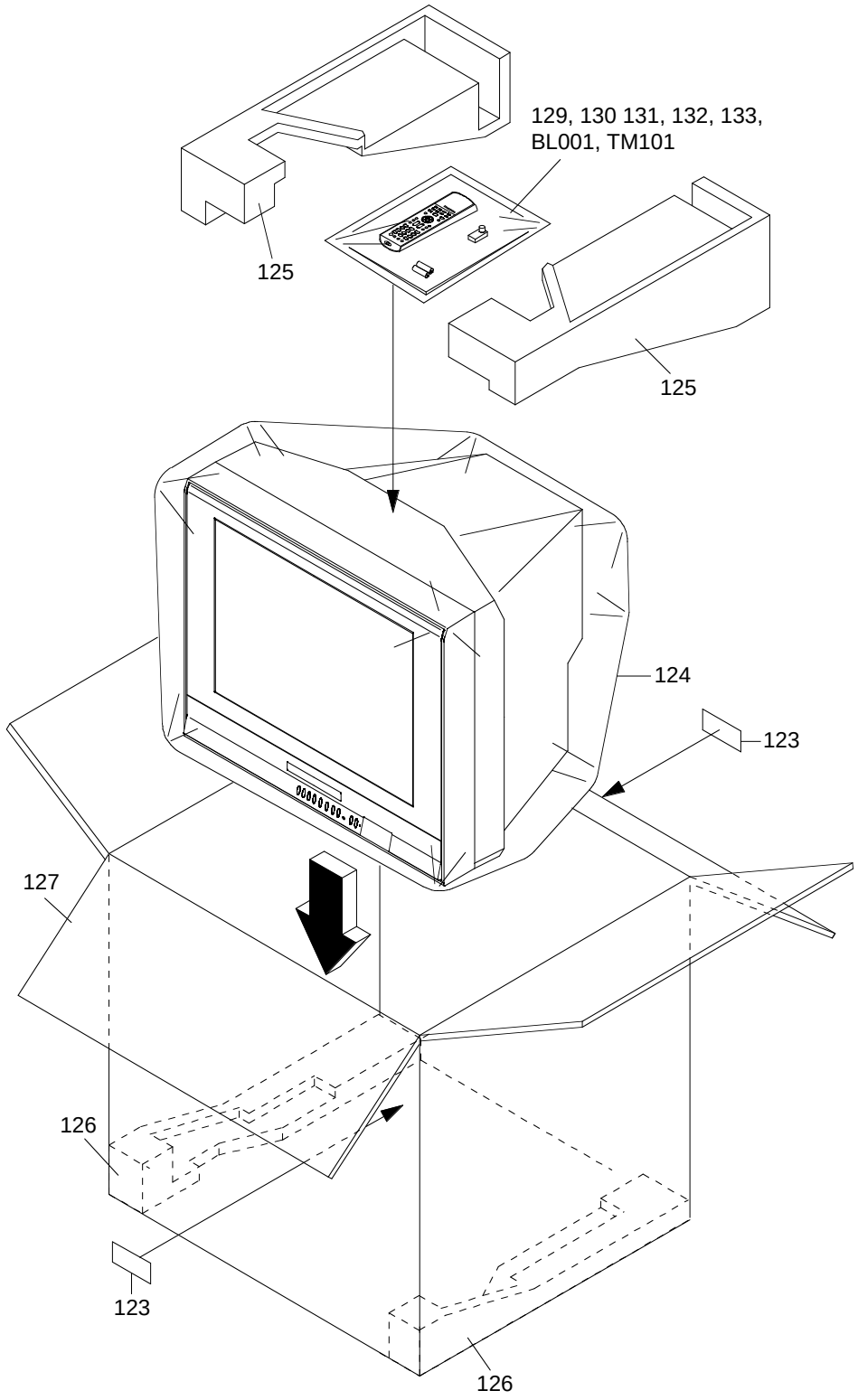

DVD DECK EXPLODED VIEW

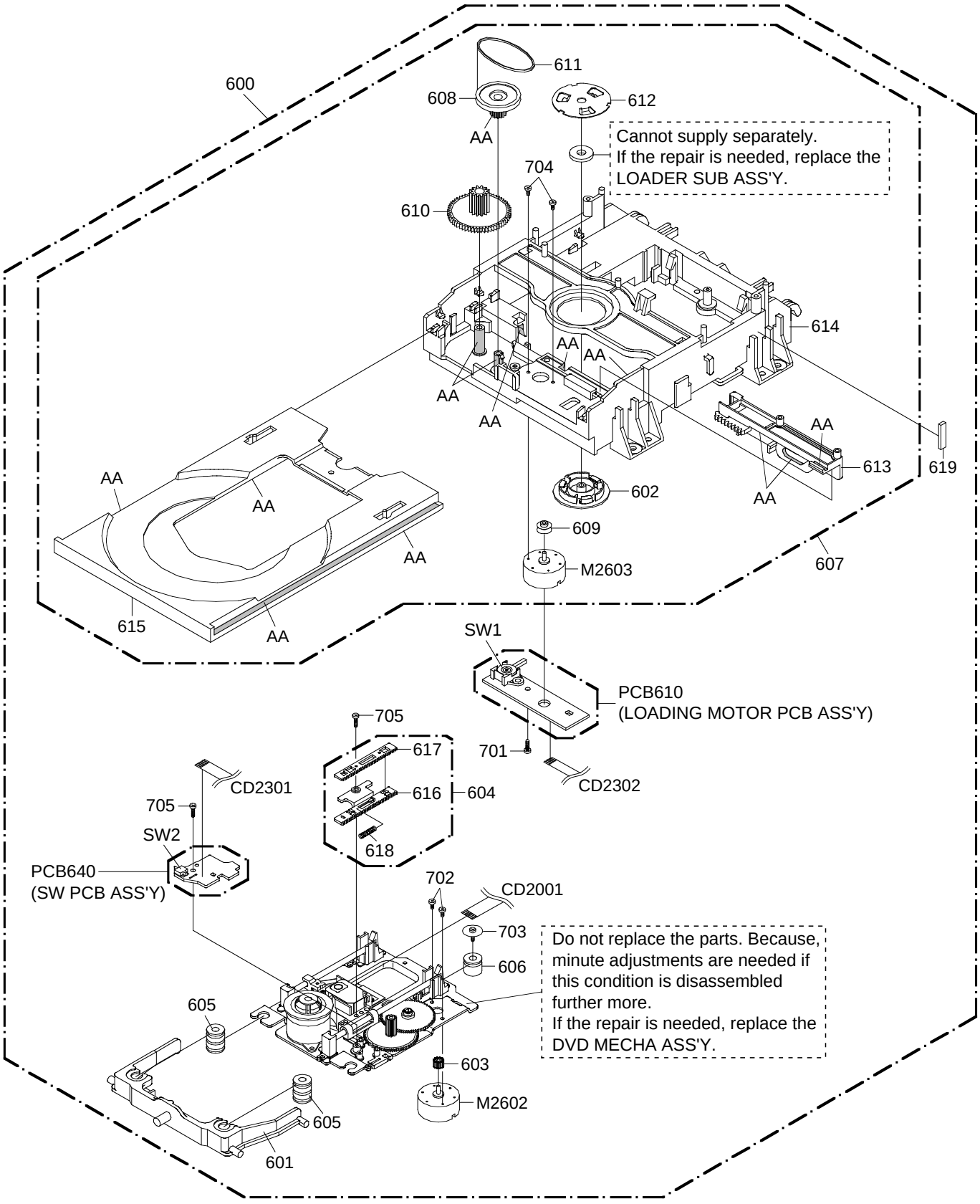

CLASS	MARK
GREASE	AA

NOTE: Applying positions AA for the grease are displayed for this section.
Check if the correct grease is applied for each position.

MECHANICAL REPLACEMENT PARTS LIST

Location No.	TSB P/N	Reference No.	Description	
101	AE006554	7A701A353A	FRONT CABI ASS'Y	
101A	AE006555	701WPJC963	CABINET,FRONT	
101B	AE006556	712WPJC136	FLAP,DVD	
101C	BZ710039	8995034000	CORD CLIP UL CO.	
101D	AE003498	713WPA0321	GLASS,LED	
101E	AE003499	713WPA0322	GUIDE,REMOCON	
101F	AE004434	7230007779	AV LABEL	
101G	AD302008	7235490036	BADGE,BRAND	
101H	AE006558	735WPBB354	BUTTON,FRAME	
101I	AE003502	738WPA0101	STOPPER,BUTTON	
101J	AE004308	742WKA0002	SPRING,DVD-FLAP	
101K	AE003071	800WQ0A041	FELT SHEET	
101L	AE007204	712WPBA127	DOOR	
102	AE006559	7A702A101A	BACK CABI ASS'Y	
102A	AE006560	702WPAA824	CABINET,BACK	
102B	AE005969	800WQ0A092	FELT SHEET	
103	AE003505	7230007757	SHEET,JACK	
104	BZ710659	752WSA0290	SHIELD,COMPO	
105	AE003506	761WPA0318	HOLDER,FBT	
106	BZ710660	741WUA0021	SPRING,EARTH	
107	BZ710671	752WSA0292	SHIELD,AV JACK	
108	AE006561	752WSAA114	PLATE BOTTOM	
109	AE003508	752WSA0389	DVD,TOP	
110	AE003509	753WUA0065	SPRING,EARTH	
111	AE006562	761WSAA034	ANGLE,DECK	
112	BZ710694	774WPA0002	HOLDER,WIRE	
113	AE003511	774WPA0006	HOLDER,WIRE	
114	AE006282	726000A081	SHEET,CRT SERVICEMAN	
115	AD301370	899EFBA002	WIRING-CLIP	
116	AE006563	722549A431	SHEET,RATING	
117	AE005650	723000C727	SHEET,CAUTION	
118	AE006564	723000C840	POP LABEL	
119	AE006107	752WSAA084	ANGLE,FRONT	
120	AE003514	761WPA0317	HOLDER,PLATE BOTTOM	
121	AE006374	769WSAA008	WASHER,CRT T=0.5	
122	BZ710260	899HV3T000	HOLDER,ANODE WIRE	
123	AE006565	723000C839	SHEET,BAR CODE	
124	AE006145	791WHAA116	FILM BAG	
125	AE003516	792WHA0533	PACKAGE,TOP	
126	AE003517	792WHA0534	PACKAGE,BOTTOM	
127	AE006566	793WCDC632	GIFT BOX	
128	AE006468	A5S101U975	INSTRUCTION BOOK KIT	
129	AE005985	JB5KD400	POLYBAG,INSTRUCTION(RED CAUTION)	
130	AE004982	J2D60129A	INFORMATION SHEET	
131	AE006469	J5S10101A	INSTRUCTION BOOK	
132	AE004983	J2D60117A	REGISTRATION CARD	
133	AE004980	J2D60143A	NETFLIX CARD	
134	BZ710259	762WPA0011	HOLDER,CRT WIRE	
135	AE006567	800WF0A007	CUSHION	
136	AE001213	800WB0A008	FIBER WASHER	
201	AE003521	8141H60C5U	SCREW,TAP TITE(P) GW20	6x35
202	AE003522	8117540B0U	SCREW,TAP TITE(B0) TRUSS	4x20
203	AE003523	811754080U	SCREW,TAP TITE(B0) TRUSS	4x8
204	AE003524	8109I30A0U	SCREW,TAP TITE(B) WH7	3x10
205	AE005917	810963080Q	SCREW,TAP TITE(B) BRAZIER	3x8
206	AE003526	810923080U	SCREW,TAP TITE(B) BIND	3x8
207	AE003527	8110E3080U	SCREW,TAP TITE(P) WH10	3x8
208	AE003528	8110630A0U	SCREW,TAP TITE(P) BRAZIER	3x10
209	AE003529	811063080U	SCREW,TAP TITE(P) BRAZIER	3x8
210	AE003530	811022680U	SCREW,TAP TITE(P) BIND	2.6x8
211	AE003531	810763080U	SCREW,TAP TITE(S) BRAZIER	3x8
212	AE003532	810723040U	SCREW,TAP TITE(S) BIND	3x4

DVD DECK REPLACEMENT PARTS LIST

	Location No.	TSB P/N	Reference No.	Description	
⚠	600	AE006266	A5R807V650	DVD MECHA ASS'Y	A5R807V650
	601	AE005003	92P100109A	HOLDER,TRAVERSE	
	602	AE003550	92P100094A	CLAMPER	
	603	AE003551	92P100088A	GEAR,MOTOR	
	604	AE003537	92AAA0013A	FEED RACK ASS'Y	
	605	AE003538	92P200013A	INSULATOR(F)	
	606	AE003539	92P200014A	INSULATOR(R)	
	607	AE006115	92SBB0029A	LOADER SUB ASS'Y	
	608	AE003541	92P100095A	GEAR,PULLEY	
	609	AE003542	92P100097A	PULLEY,MOTOR	
	610	AE003549	92P100096A	GEAR,MAIN	
	611	AE003544	92P200012A	BELT,LOADING	
	612	AE003545	92P000014A	PLATE,CLAMPER	
	613	AE003546	92P100093A	RACK,LOADING	
	614	AE003547	92P100091A	FRAME,MAIN	
	615	AE003548	92P100092A	TRAY	
	616	AE003535	92P100089A	RACK,FEED 1	
	617	AE003536	92P100090A	RACK,FEED 2	
	618	AE003543	92P300020A	SPRING,RACK FEED	
	619	BZ710149	800WFAA008	CUSHION C	
	701	AE003530	811022680U	SCREW,TAP TITE(P) BIND	2.6x8
	702	AE003554	814011723U	SCREW,PAN	M1.7x2.3 P3
	703	AE003555	816112080U	SEMS.TAP TITE(P) PAN W10	2x8
	704	AE003556	814011730U	SCREW,PAN	M1.7x3 P3
	705	AE003557	811022080U	SCREW,TAP TITE(P) BIND	2x8
	CD2001	AD301855	122H0O1901	CORD JUMPER	2H0O1901
	CD2301	AE003558	122H062102	CORD JUMPER	2H062102
	CD2302	AE003559	122H052601	CORD JUMPER	2H052601
⚠	M2602	AE005930	1515S98003	FEED MOTOR	BCZ3B03B
⚠	M2603	AE005931	1596S18003	MOTOR,LOADING	BCZ3B52B
	PCB610	AE005932	A5R801V610	PCB ASS'Y	DED003A
	PCB640	AE005933	A5R801V640	PCB ASS'Y	DED002B
	SW1	AE003564	0515S32002	SWITCH	SSS-13-2
	SW2	AE003565	0500101037	PUSH SWITCH	ESE22MH24

ELECTRICAL REPLACEMENT PARTS LIST

Location No.	TSB P/N	Reference No.		Description
			RESISTORS	
⚠R401	BZ210258	R4X5T6472F	R,METAL	4.7K OHM 1/6W
⚠R403	BZ210105	R4X5T6183F	R,METAL	18K OHM 1/6W
⚠R405	BZ210231	R4X5T6153F	R,METAL	15K OHM 1/6W
⚠R406	AD301344	R3X18A151J	R,METAL OXIDE	150 OHM 2W
⚠R412	AE006490	R63881330J	R,FUSE	33 OHM 1W
⚠R417	BZ210262	R3X28A221J	R,METAL OXIDE	220 OHM 2W
⚠R423	BZ210051	R3X18AR47J	R,METAL OXIDE	0.47 OHM 2W
⚠R429	BZ210053	R002T22R2J	RC	2.2 OHM 1/2W
⚠R430	AE002243	R5X34F5R6J	R,CEMENT	0 5.6 OHM 10W
⚠R434	BZ210130	R002T21R5J	RC	1.5 OHM 1/2W
⚠R435	AE003590	R655822R2J	R,FUSE	2.2 OHM 1/2W
⚠R436	BZ210277	R3X181101J	R,METAL OXIDE	100 OHM 1W
⚠R440	AE003588	R65581010J	R,FUSE	1 OHM 1W
⚠R445	AE003589	R655811R8J	R,FUSE	1.8 OHM 1W
⚠R454	BZ210003	R3K181102J	R,METAL OXIDE	1K OHM 1W
⚠R803	BZ210050	R3X18A123J	R,METAL OXIDE	12K OHM 2W
⚠R805	BZ210050	R3X18A123J	R,METAL OXIDE	12K OHM 2W
⚠R807	BZ210050	R3X18A123J	R,METAL OXIDE	12K OHM 2W
⚠R3010	AE003587	R3X18A330J	R,METAL OXIDE	33 OHM 2W
⚠R3014	BZ210111	R3X28B3R3J	R,METAL OXIDE	3.3 OHM 3W
R3023	BZ210288	R00204750J	RC	75 OHM 1/4W
⚠R3800	BZ210230	R4X5T6332F	R,METAL	3.3K OHM 1/6W
⚠R3803	BZ210206	R002T2155J	RC	1.5M OHM 1/2W
⚠R3806	BZ210080	R0G3K2275K	RC	2.7M OHM 1/2W
⚠R3812	BZ210217	R3X181331J	R,METAL OXIDE	330 OHM 1W
⚠R3817	BZ210117	R5X2CE010J	R,CEMENT	1 OHM 7W
⚠R3821	BZ210063	R3X181R22J	R,METAL OXIDE	0.22 OHM 1W
⚠R3828	AE005735	R63881R22J	R,FUSE	0.22 OHM 1W
			CAPACITORS	
⚠C357	AD301977	E0ELF4102M	CE	1000 UF 35V
⚠C403	BZ110195	E02LU8220M	CE	22 UF 100V
⚠C408	BZ110233	P4N8FK332H	CMPP	0.0033UF 1.5KV
⚠C409	AD301434	E02LU4101M	CE	100 UF 35V
C412	BZ210173	P4J7F3474J	CMPP	0.47 UF 250V PMS
C417	BZ110054	P3N1F5333J	CPP	0.033 UF 630V
⚠C418	AD302207	P4N8FK153H	CMPP	0.015 UF 1.5KV
⚠C429	BZ110194	E5EZU4101M	CE	100 UF 35V
⚠C430	BZ110101	E5EZF3222M	CE	2200 UF 25V
⚠C434	BZ110055	E5EZF4102M	CE	1000 UF 35V
C435	AE003580	E62DFD100M	CE	10 UF 250V
⚠C446	BZ110225	E5EZFD220M	CE	22 UF 250V
C449	BZ110202	C0PLRR713K	CC	0.001 UF 2KV R
C802	BZ110226	C0JBB07H3K	CC	0.0022UF 2KV B
C3015	AE006489	E0E300220M	CE	22 UF 6.3V
⚠C3801	BZ110025	P2122B224M	CMP	0.22 UF 275V ECQUL
⚠C3810	BZ110061	C0JTB0513K	CC	0.001 UF 500V B
C3811	AD301702	C0PLRR7G3K	CC	0.0018 UF 2KV R
⚠C3812	BZ110061	C0JTB0513K	CC	0.001 UF 500V B
⚠C3815	AE000700	E52DHC681M	CE	5 680 UF 200V
⚠C3816	AE002878	CD39E0MQ3M	CC	0.0047UF 250V
⚠C3818	BZ110169	E5EZF2332M	CE	3300 UF 16V
⚠C3820	AD302085	E02LU53R3M	CE	3.3 UF 50V
⚠C3821	AE000467	E02LU54R7M	CE	4.7 UF 50V
⚠C3822	BZ110028	E5EZT2102M	CE	1000 UF 16V
⚠C3823	BZ110032	E5EZF3102M	CE	1000 UF 25V
C3824	BZ110202	C0PLRR713K	CC	0.001 UF 2KV R
⚠C3826	AE004799	E61SFC221M	CE	220 UF 200V
⚠C3827	BZ110101	E5EZF3222M	CE	2200 UF 25V
			DIODES	
D101	BZ410006	D1VT001330	DIODE,SILICON	1SS133T-77
D102	BZ410021	D97U05R61B	DIODE,ZENER	MTZJ5.6B T-77
D105	BZ410006	D1VT001330	DIODE,SILICON	1SS133T-77
D106	BZ410006	D1VT001330	DIODE,SILICON	1SS133T-77
D301	BZ410006	D1VT001330	DIODE,SILICON	1SS133T-77
D401	BZ410006	D1VT001330	DIODE,SILICON	1SS133T-77
⚠D402	BZ410063	D2WTAU02A0	DIODE,SILICON	AU02A-EIC
D403	BZ410043	D2WT011E10	DIODE,SILICON	11E1-EIC
D404	BZ410043	D2WT011E10	DIODE,SILICON	11E1-EIC
D405	BZ410117	D2BFRS4FS0	DIODE,SILICON	RS-4FS
D406	BZ410118	D2BFRU4AM0	DIODE,SILICON	RU-4AM
⚠D407	BZ410063	D2WTAU02A0	DIODE,SILICON	AU02A-EIC

ELECTRICAL REPLACEMENT PARTS LIST

Location No.	TSB P/N	Reference No.		Description
		DIODES		
⚠D408	BZ410021	D97U05R61B	DIODE,ZENER	MTZJ5.6B T-77
D410	BZ410043	D2WT011E10	DIODE,SILICON	11E1-EIC
D411	BZ410021	D97U05R61B	DIODE,ZENER	MTZJ5.6B T-77
⚠D412	BZ410063	D2WTAU02A0	DIODE,SILICON	AU02A-EIC
D413	BZ410019	D97U03001B	DIODE,ZENER	MTZJ30B T-77
D414	BZ410019	D97U03001B	DIODE,ZENER	MTZJ30B T-77
⚠D415	BZ410063	D2WTAU02A0	DIODE,SILICON	AU02A-EIC
D416	BZ410085	D2WXN40050	DIODE,SILICON	1N4005-EIC
D417	BZ410022	D97U06R81B	DIODE,ZENER	MTZJ6.8B T-77
D418	BZ410037	D97U03301B	DIODE,ZENER	MTZJ33B T-77
D419	BZ410006	D1VT001330	DIODE,SILICON	1SS133T-77
D420	BZ410006	D1VT001330	DIODE,SILICON	1SS133T-77
D601	AD300070	D97U01201B	DIODE,ZENER	MTZJ12B T-77
D602	AD300070	D97U01201B	DIODE,ZENER	MTZJ12B T-77
D603	AD300070	D97U01201B	DIODE,ZENER	MTZJ12B T-77
D604	BZ410034	D97U01301B	DIODE,ZENER	MTZJ13B T-77
D801	BZ410006	D1VT001330	DIODE,SILICON	1SS133T-77
D802	BZ410006	D1VT001330	DIODE,SILICON	1SS133T-77
D803	BZ410006	D1VT001330	DIODE,SILICON	1SS133T-77
D804	BZ410006	D1VT001330	DIODE,SILICON	1SS133T-77
D805	BZ410006	D1VT001330	DIODE,SILICON	1SS133T-77
D806	BZ410006	D1VT001330	DIODE,SILICON	1SS133T-77
D900	BZ410006	D1VT001330	DIODE,SILICON	1SS133T-77
D2201	BZ410087	0021E2Q140	LED	LTL-1CHEE-002A
D2303	BZ410086	DD7R0S3550	DIODE,SILICON	1SS355 TE-17
D2304	BZ410086	DD7R0S3550	DIODE,SILICON	1SS355 TE-17
D3002	BZ410021	D97U05R61B	DIODE,ZENER	MTZJ5.6B T-77
D3003	BZ410006	D1VT001330	DIODE,SILICON	1SS133T-77
D3801	BZ410021	D97U05R61B	DIODE,ZENER	MTZJ5.6B T-77
D3802	BZ410043	D2WT011E10	DIODE,SILICON	11E1-EIC
D3803	BZ410006	D1VT001330	DIODE,SILICON	1SS133T-77
D3804	AD300671	D97U01801B	DIODE,ZENER	MTZJ18B T-77
D3805	BZ410006	D1VT001330	DIODE,SILICON	1SS133T-77
D3806	BZ410006	D1VT001330	DIODE,SILICON	1SS133T-77
D3807	AD300731	D2WXN49370	DIODE,SILICON	1N4937
⚠D3808	BZ410085	D2WXN40050	DIODE,SILICON	1N4005-EIC
⚠D3809	BZ410085	D2WXN40050	DIODE,SILICON	1N4005-EIC
D3810	AD300671	D97U01801B	DIODE,ZENER	MTZJ18B T-77
D3811	BZ410006	D1VT001330	DIODE,SILICON	1SS133T-77
D3812	BZ410006	D1VT001330	DIODE,SILICON	1SS133T-77
D3813	BZ410037	D97U03301B	DIODE,ZENER	MTZJ33B T-77
⚠D3814	BZ410085	D2WXN40050	DIODE,SILICON	1N4005-EIC
⚠D3815	BZ410085	D2WXN40050	DIODE,SILICON	1N4005-EIC
⚠D3816	BZ410085	D2WXN40050	DIODE,SILICON	1N4005-EIC
⚠D3817	AE000601	D28F31DQ06	DIODE,SILICON	31DQ06-FC
⚠D3818	AD300731	D2WXN49370	DIODE,SILICON	1N4937
⚠D3819	BZ410010	D28T21DQN9	DIODE,SCHOTTKY	21DQ09N-TA2B1
⚠D3820	BZ410010	D28T21DQN9	DIODE,SCHOTTKY	21DQ09N-TA2B1
⚠D3821	BZ410126	D2WXRU3AM0	DIODE,SILICON	RU3AM-EIC
D3822	BZ410006	D1VT001330	DIODE,SILICON	1SS133T-77
⚠D3823	AE006082	D28F0PRA60	DIODE,RECTIFIER	30PRA60-FC
⚠D3824	BZ410085	D2WXN40050	DIODE,SILICON	1N4005-EIC
D3825	AD300070	D97U01201B	DIODE,ZENER	MTZJ12B T-77
D3826	BZ410006	D1VT001330	DIODE,SILICON	1SS133T-77
D3827	BZ410006	D1VT001330	DIODE,SILICON	1SS133T-77
D3828	BZ410067	D97U02R21B	DIODE,ZENER	MTZJ2.2B T-77
⚠D3829	BZ410085	D2WXN40050	DIODE,SILICON	1N4005-EIC
⚠D3830	BZ410085	D2WXN40050	DIODE,SILICON	1N4005-EIC
D3831	BZ410064	D97U03R91B	DIODE,ZENER	MTZJ3.9B T-77
⚠D3832	BZ410010	D28T21DQN9	DIODE,SCHOTTKY	21DQ09N-TA2B1
D4001	BZ410086	DD7R0S3550	DIODE,SILICON	1SS355 TE-17
D4002	BZ410086	DD7R0S3550	DIODE,SILICON	1SS355 TE-17
D4003	BZ410086	DD7R0S3550	DIODE,SILICON	1SS355 TE-17
D4004	BZ410086	DD7R0S3550	DIODE,SILICON	1SS355 TE-17
D4005	BZ410086	DD7R0S3550	DIODE,SILICON	1SS355 TE-17
D8111	BZ410086	DD7R0S3550	DIODE,SILICON	1SS355 TE-17
D8112	BZ410086	DD7R0S3550	DIODE,SILICON	1SS355 TE-17
		ICS		
IC101	AE006062	I55D06084A	IC	OEC6084A
IC103	AD301641	I9UF032310	IC	PST3231NR
⚠IC199	AE006488	A5S5016D25	INIT DATA	BR24L04F-WE2

ELECTRICAL REPLACEMENT PARTS LIST

Location No.	TSB P/N	Reference No.		Description
		ICS		
IC302	AD301983	I01FF58910	IC	AN5891SA-E1V
⚠IC351	AD300056	I0FSP52760	IC	AN5276
⚠IC401	BZ611117	I03TD80410	IC	LA78041
IC601	AE003582	I03FC324N0	IC	LA76324NM-MPB-E
IC602	AE000143	I1KF98L100	IC	KIA78L10F-RTF
IC902	BZ611068	I01FF58290	IC	AN5829S-E1V
IC905	AD301988	I0UF015010	IC	MM1501XNRE
IC906	AD301988	I0UF015010	IC	MM1501XNRE
IC1501	AE006220	I05FEA45FG	IC	TC90A45FG
IC1502	BZ611139	I0QF02534V	IC	NJM2534V(TE2)
IC1503	AD301988	I0UF015010	IC	MM1501XNRE
IC2301	AE003581	I03F065650	IC	LA6565-TE-L-E
IC2304	AE005769	I07J003580	IC	BA10358FV-E2
⚠IC3001	AD301931	I1KA78R050	IC	KIA278R05PI
⚠IC3003	AD301931	I1KA78R050	IC	KIA278R05PI
⚠IC3004	AD301929	I1KA78R090	IC	KIA278R09PI
⚠IC3800	AE002809	000220002W	PHOTO COUPLER	PS2561AL1-1-V(W)
IC4001	AE005760	ICQK068620	IC	ZR36862PQCG
IC4002	AE005421	I57J0L02F0	IC	BR24L02F-WE2
IC4003	AE006061	I07F9E00W0	IC	BA33E00WHFP-TR
IC4007	AE006491	S5S5016F01	MEMORY DATA	SST39VF800A-70-4C-EKE
IC4008	AE006454	IFLJ0622H6	IC	K4S161622H-UC60
IC4009	AE006454	IFLJ0622H6	IC	K4S161622H-UC60
IC4201	AE001295	I0QJ045800	IC	NJM4580M(TE1)
IC8102	AE003584	I17F017530	IC	PCM1753DBQR
		TRANSISTORS		
Q104	BZ510108	TAAA1504SY	TRANSISTOR SILICON	KTA1504S_Y_RTK
Q105	BZ510109	TCAA3875SY	TRANSISTOR SILICON	KTC3875S_Y_RTK
Q301	BZ510108	TAAA1504SY	TRANSISTOR SILICON	KTA1504S_Y_RTK
⚠Q401	BZ510097	TCAT03227Y	TRANSISTOR SILICON	KTC3227_Y-AT
⚠Q402	BZ510110	TC30041590	TRANSISTOR SILICON	2SC4159(D,E)
⚠Q403	AD302136	TD50026380	TRANSISTOR SILICON	2SD2638(OEC)
⚠Q404	BZ510073	TAATA12660	TRANSISTOR SILICON	KTA1266-AT(Y,GR)
⚠Q405	BZ510073	TAATA12660	TRANSISTOR SILICON	KTA1266-AT(Y,GR)
⚠Q406	BZ510004	TA3T016240	TRANSISTOR SILICON	2SA1624-AA
Q410	BZ510069	TCATC31980	TRANSISTOR SILICON	KTC3198-AT(Y,GR)
Q601	BZ510109	TCAA3875SY	TRANSISTOR SILICON	KTC3875S_Y_RTK
Q602	BZ510109	TCAA3875SY	TRANSISTOR SILICON	KTC3875S_Y_RTK
Q604	BZ510021	TNYJC05001	COMPOUND TRANSISTOR	DTC124EKAT146
Q605	BZ510090	TPAAB05001	COMPOUND TRANSISTOR	KRA102SRTK
⚠Q801	BZ510100	TCATC3199Y	TRANSISTOR SILICON	KTC3199_Y-AT
⚠Q802	BZ510100	TCATC3199Y	TRANSISTOR SILICON	KTC3199_Y-AT
⚠Q803	BZ510100	TCATC3199Y	TRANSISTOR SILICON	KTC3199_Y-AT
⚠Q804	BZ510009	TC3F042170	TRANSISTOR SILICON	2SC4217(D,E)-RAC
⚠Q805	BZ510009	TC3F042170	TRANSISTOR SILICON	2SC4217(D,E)-RAC
⚠Q806	BZ510009	TC3F042170	TRANSISTOR SILICON	2SC4217(D,E)-RAC
Q1501	BZ510109	TCAA3875SY	TRANSISTOR SILICON	KTC3875S_Y_RTK
Q1502	BZ510109	TCAA3875SY	TRANSISTOR SILICON	KTC3875S_Y_RTK
Q1503	BZ510109	TCAA3875SY	TRANSISTOR SILICON	KTC3875S_Y_RTK
Q2201	BZ510067	TNAAC05002	COMPOUND TRANSISTOR	KRC103SRTK
Q2301	BZ510112	T67J1036K0	TRANSISTOR SILICON	2SA1036KT146
Q2302	AE003592	T67J048TL0	TRANSISTOR SILICON	2SA2048TL
Q2303	BZ510109	TCAA3875SY	TRANSISTOR SILICON	KTC3875S_Y_RTK
Q2304	BZ510109	TCAA3875SY	TRANSISTOR SILICON	KTC3875S_Y_RTK
Q2305	BZ510109	TCAA3875SY	TRANSISTOR SILICON	KTC3875S_Y_RTK
⚠Q3002	BZ510057	TAAT01281Y	TRANSISTOR SILICON	KTA1281_Y
⚠Q3005	BZ510105	TCAT03209Y	TRANSISTOR SILICON	KTC3209_Y-AT
Q3007	BZ510071	TNAAB05003	COMPOUND TRANSISTOR	KRC102SRTK
⚠Q3008	BZ510070	TCAT032034	TRANSISTOR SILICON	KTC3203_Y-AT
Q3800	BZ510069	TCATC31980	TRANSISTOR SILICON	KTC3198-AT(Y,GR)
Q3801	BZ510069	TCATC31980	TRANSISTOR SILICON	KTC3198-AT(Y,GR)
⚠Q3802	BZ510070	TCAT032034	TRANSISTOR SILICON	KTC3203_Y-AT
⚠Q3803	AE003591	T250035680	FET	2SK3568(ORION_Q)
Q4004	BZ510109	TCAA3875SY	TRANSISTOR SILICON	KTC3875S_Y_RTK
Q4201	BZ510109	TCAA3875SY	TRANSISTOR SILICON	KTC3875S_Y_RTK
Q4203	BZ510088	TNAAD05001	COMPOUND TRANSISTOR	KRC104SRTK
Q4209	BZ510067	TNAAC05002	COMPOUND TRANSISTOR	KRC103SRTK
Q4210	BZ510107	TPAAA05001	COMPOUND TRANSISTOR	KRA101SRTK
Q4211	BZ510109	TCAA3875SY	TRANSISTOR SILICON	KTC3875S_Y_RTK
Q4212	BZ510109	TCAA3875SY	TRANSISTOR SILICON	KTC3875S_Y_RTK

ELECTRICAL REPLACEMENT PARTS LIST

Location No.	TSB P/N	Reference No.		Description
		COILS &TRANSFORMERS		
L001	BZ310196	02167B101K	COIL	100 UH
L101	BZ310030	021LA6560K	COIL	56 UH
L301	BZ310196	02167B101K	COIL	100 UH
L401	BZ310125	02D1000001	COIL	ELC16B501EN
⚠L402	BZ310063	022100027A	COIL,LINEARITY	ELH5L4113
L403	AD301644	021L75472J	COIL	4.7 MH
L601	BZ310041	02167F101J	COIL	100 UH
L602	AE000988	02167F680J	COIL	68 UH
L801	BZ310069	02167D151K	COIL	150 UH
L902	BZ310041	02167F101J	COIL	100 UH
L904	BZ310041	02167F101J	COIL	100 UH
L1501	AD300613	02167F150J	COIL	15 UH
L1502	AD300613	02167F150J	COIL	15 UH
L1503	BZ310041	02167F101J	COIL	100 UH
L1504	BZ310139	02167F151J	COIL	150 UH
L1505	BZ310077	021LA61R0M	COIL	1 UH
L1506	BZ310041	02167F101J	COIL	100 UH
L1507	BZ310041	02167F101J	COIL	100 UH
⚠L3800	AE000066	028R250014	COIL,DEGAUSS	8R250014
⚠L3801	BZ310180	029T000105	COIL,LINE FILTER	2R2A752F28
⚠L3802	BZ310180	029T000105	COIL,LINE FILTER	2R2A752F28
L3803	BZ310181	02A6B2E0A1	CORE,FERRITE	HF70T22*10*14
L4001	BZ310191	02167F2R2J	COIL	2.2 UH
L4002	BZ310118	02AHB9A972	CORE,FERRITE	W5T29X7.5X19
L4201	BZ310041	02167F101J	COIL	100 UH
L4202	BZ310041	02167F101J	COIL	100 UH
L8102	AE000828	02167F1R0K	COIL	1 UH
L8103	AE000828	02167F1R0K	COIL	1 UH
T401	AE002190	0450190171	TRANS,HORIZONTAL DRIVE	ETH19Y206AY
⚠T3800	AE003567	0481390384	TRANSFORMER,SWITCHING	81390384
		JACKS		
⚠J301	AE003431	060J131016	HEADPHONE JACK	MSJ-2000_AG
⚠J801	AD301356	066F130020	SOCKET,CATHODE RAY,TUBE	ISHS53S
J2202	AE002949	060J421036	RCA JACK	MTJ-032-05A-30-FE
J2203	AE002950	060J421037	RCA JACK	MTJ-032-05A-32-FE
J2204	AE002951	060J421030	RCA JACK	MTJ-032-05A-31-FE
J4201	AE003568	060J401102	RCA JACK	MSP-251V-05NI-FE-LF
J4203	AE002759	060J431020	RCA JACK	MSP-213V2-432_NI_LF
		SWITCHES		
SW2213	BZ612010	0504101T34	SWITCH,TACT	EVQ21505R
SW2214	BZ612010	0504101T34	SWITCH,TACT	EVQ21505R
SW2215	BZ612010	0504101T34	SWITCH,TACT	EVQ21505R
SW2216	BZ612010	0504101T34	SWITCH,TACT	EVQ21505R
SW2217	BZ612010	0504101T34	SWITCH,TACT	EVQ21505R
SW2218	BZ612010	0504101T34	SWITCH,TACT	EVQ21505R
SW2219	BZ612010	0504101T34	SWITCH,TACT	EVQ21505R
SW2220	BZ612010	0504101T34	SWITCH,TACT	EVQ21505R
SW2221	BZ612010	0504101T34	SWITCH,TACT	EVQ21505R
SW2223	BZ612010	0504101T34	SWITCH,TACT	EVQ21505R
		VARIABLE RESISTORS		
VR404	BZ210218	V1K63H3BTE	VOLUME,SEMI FIXED	NVG6TLTAB222
VR3800	BZ210265	V1K63Q2BTE	VOLUME,SEMI FIXED	NVG6TLTAB471
		P.C.BOARD ASSEMBLIES		
PCB110	AE006485	A5S5016110	PCB ASS'Y	CCE013A
PCB130	AE006486	A5S5016130	PCB ASS'Y	DMD020A
PCBD20	AE006487	A5S5016D20	PCB ASS'Y	CME013A
		MISCELLANEOUS		
B401	BZ310121	024HT03553	CORE,BEADS	W5RH3.5X5X1.0
B403	BZ310121	024HT03553	CORE,BEADS	W5RH3.5X5X1.0
B601	BZ310121	024HT03553	CORE,BEADS	W5RH3.5X5X1.0
B1501	BZ310121	024HT03553	CORE,BEADS	W5RH3.5X5X1.0
B2301	AE005476	0246C51024	CORE,BEADS	MMZ1608R102CT
B2302	AE005476	0246C51024	CORE,BEADS	MMZ1608R102CT
B2303	AE005476	0246C51024	CORE,BEADS	MMZ1608R102CT
B2304	AE005476	0246C51024	CORE,BEADS	MMZ1608R102CT
B2305	AE005476	0246C51024	CORE,BEADS	MMZ1608R102CT
B3001	BZ310121	024HT03553	CORE,BEADS	W5RH3.5X5X1.0
B3800	BZ310122	024HT03563	CORE,BEADS	W4BRH3.5X6X1.0X2
B3801	BZ310122	024HT03563	CORE,BEADS	W4BRH3.5X6X1.0X2
B4001	AE005476	0246C51024	CORE,BEADS	MMZ1608R102CT
B4002	AE005476	0246C51024	CORE,BEADS	MMZ1608R102CT

ELECTRICAL REPLACEMENT PARTS LIST

Location No.	TSB P/N	Reference No.		Description
			MISCELLANEOUS	
B4003	AE005476	0246C51024	CORE,BEADS	MMZ1608R102CT
B4005	AE005476	0246C51024	CORE,BEADS	MMZ1608R102CT
B4006	AE005476	0246C51024	CORE,BEADS	MMZ1608R102CT
B4007	AE005476	0246C51024	CORE,BEADS	MMZ1608R102CT
B4008	AE005476	0246C51024	CORE,BEADS	MMZ1608R102CT
B4009	AE005476	0246C51024	CORE,BEADS	MMZ1608R102CT
B4010	AE005476	0246C51024	CORE,BEADS	MMZ1608R102CT
B4011	AE005476	0246C51024	CORE,BEADS	MMZ1608R102CT
B4012	AE005476	0246C51024	CORE,BEADS	MMZ1608R102CT
B4013	AE005476	0246C51024	CORE,BEADS	MMZ1608R102CT
B4014	AE005476	0246C51024	CORE,BEADS	MMZ1608R102CT
B4016	AE005476	0246C51024	CORE,BEADS	MMZ1608R102CT
B4017	AE005476	0246C51024	CORE,BEADS	MMZ1608R102CT
B4018	AE005476	0246C51024	CORE,BEADS	MMZ1608R102CT
B4201	BZ310121	024HT03553	CORE,BEADS	W5RH3.5X5X1.0
B8103	AE005476	0246C51024	CORE,BEADS	MMZ1608R102CT
BL001	BZ310014	023C00022A	COIL,BALUN	HPN-01
BT001	AE005640	141R004016	BATTERY,MANGAN	GR03X-SP2
BT002	AE005640	141R004016	BATTERY,MANGAN	GR03X-SP2
CD303	AD302372	06CU14A001	CORD,CONNECTOR	CU14A001
CD801	AE005637	06CH823004	CORD,CONNECTOR	CH823004
CD802	AE003593	WEL6844038	FLAT CABLE	AWM2468 AWG26 7C GRAY 440MM
CD803	BZ614316	WCL6840038	FLAT CABLE	AWM2468 AWG26 5C GRAY 400MM
CP101	BZ614239	069S290639	CONNECTOR PCB SIDE	A2001WR2-9P
CP303	AD301045	069S140419	CONNECTOR PCB SIDE	A2502WV2-4P
⚠CP404	AE004859	069S460089	CORD UX CONNECTOR	A1561WV2-A6P
CP801	BZ614269	069S320010	CONNECTOR PCB SIDE	A2361WV2-2P
CP804	BZ614058	069W010010	CONNECTOR PCB SIDE	005P-2100
⚠CD3800	AE005639	1209414909	CORD,AC BUSH	9414909
CD4002	AE006055	06C32B2202	CORD,CONNECTOR	C32B2202
CD8101	AE000134	122H0C2204	CORD,JUMPER	2H0C2204
CP2301	AE003571	069GYOT119	CONNECTOR PCB SIDE	09-5000-024-001-001
CP2302	AE005934	069EV53030	CONNECTOR PCB SIDE	00_6232_005_006_800+
CP2303	AE005935	069EV63030	CONNECTOR PCB SIDE	00_6232_006_006_800+
⚠CP3800	BZ614283	069S420110	CONNECTOR PCB SIDE	A1561WV2-2P
CP8001	AE003572	069S2B0639	CONNECTOR PCB SIDE	A2001WR2-11P
CP8002	AD301798	069J7C0019	CONNECTOR PCB SIDE	IMSA-9604S-12Z13
CP802A	AD301997	067U007029	WIRE HOLDER	B2013H02-7P
CP802B	AD301997	067U007029	WIRE HOLDER	B2013H02-7P
CP803A	BZ614276	067U005049	WIRE HOLDER	B2013H02-5P
CP803B	BZ614276	067U005049	WIRE HOLDER	B2013H02-5P
CP8101	AE006053	069J7C0589	CONNECTOR PCB SIDE	IMSA-9604S-12F
CUS133	BZ710149	800WFAA008	CUSHION C	
ELD201	BZ614043	124116281A	EYE LET	XRY16X28BD
ELD202	BZ614044	124120301A	EYE LET	XRY20X30BD
⚠F3800	BZ614504	081PC05005	FUSE	51MS050L
⚠FB401	AE003085	043224007F	TRANSFORMER,FLYBACK	FSU24A001_M
FH3800	AE002634	06710T0009	HOLDER,FUSE	EYF-52BCY
FH3801	AE002634	06710T0009	HOLDER,FUSE	EYF-52BCY
OS2202	BZ614199	077Q004017	REMOTE RECEIVER	PIC-37243SR
PH3800	BZ614016	069W01001A	CONNECTOR PCB SIDE	003P-2100
PH3801	BZ614016	069W01001A	CONNECTOR PCB SIDE	003P-2100
⚠RY3800	AD300114	0560V20115	RELAY	ALKS321
⚠SP351	AE006459	070N546012	SPEAKER	YDP4010-2
⚠SP352	AE006459	070N546012	SPEAKER	YDP4010-2
TM101	AE006056	076D0KG010	TRANSMITTER	ORT204N7404359-U
⚠TU001	AE006069	0163300018	RF UNIT	115-V-KA35ARB
⚠TH3800	AD302000	D8EE0B1400	DEGAUSS ELEMENT	B59203-S1060-B14
⚠V801	AE003574	098W250402	CRT W/DY	A60LVY196X11(OL)
X101	BZ613019	1002T01606	CERAMIC OSCILLATOR	CSTLS16M0X53-A0
X601	AD301951	100CT3R532	CRYSTAL	HC-49/U-S
X4001	AD301803	100BT02701	CRYSTAL	HC-49U/S

ELECTRICAL REPLACEMENT PARTS LIST

RESISTOR

RC.....	CARBON RESISTOR

CAPACITORS

CC.....	CERAMIC CAPACITOR
CE.....	ALUMI ELECTROLYTIC CAPACITOR
CP.....	POLYESTER CAPACITOR
CPP.....	POLYPROPYLENE CAPACITOR
CPL.....	PLASTIC CAPACITOR
CMP.....	METAL POLYESTER CAPACITOR
CMPL.....	METAL PLASTIC CAPACITOR
CMPP.....	METAL POLYPROPYLENE CAPACITOR

TOSHIBA CORPORATION
1-1, SHIBAURA 1-CHOME, MINATO-KU, TOKYO 105-8001, JAPAN